[redacted]

From: Wilson, Anita <awilson@velaw.com>
Sent: Wednesday, August 23, 2017 10:07 AM
To: [redacted]; Jacqueline Holmes
Cc: Decker, John
Subject: Request for meeting on jurisdictional issues

[redacted] per my voicemail yesterday, after discussion and checking on changes in travel schedules with the client, Fortress would like to schedule their meeting with you on jurisdictional issues on Thursday, September 7. Please could you let us know what times might be available on that day.

Thank you for your help in coordinating this meeting,
Anita

Anita Rutkowski Wilson
Partner

E awilson@velaw.com
W+1 202.639.6776

Vinson & Elkins LLP
2200 Pennsylvania Avenue NW
Suite 500 West
Washington, DC 20037-1701

blog.velaw.com

Information withheld pursuant to FOIA Exemption 6.

From: Wilson, Anita <awilson@velaw.com>
Sent: Wednesday, September 06, 2017 5:14 PM
To: Jacqueline Holmes; [redacted]
Cc: Terhune, Christopher
Subject: FERC Meeting Materials -- Repauno Project
Attachments: Repauno Project - FERC Meeting Agenda (9-7-17) (3).DOCX; The Gas Company, LLC, 142 FERC 61036 (2013).pdf; Emera CNG, LLC, 148 FERC P 61219 (2014).pdf; Shell US Gas & Power, LLC, 148 FERC P 61163 (2014).pdf

Attached is a draft agenda for tomorrow's meeting, as well as several orders that we considered in the context of this port project. The discussion tomorrow may be relatively short in duration but, given the current work load of the FERC Staff, that may be welcome news for your team.

Thanks so much, Anita

Anita Rutkowski Wilson
Partner
E awilson@velaw.com
W+1.202.639.6776
Vinson & Elkins LLP
2200 Pennsylvania Avenue NW
Suite 500 West
Washington, DC 20037-1701
bio | vcard | velaw.com

Information withheld pursuant to FOIA Exemption 6.

Agenda for FERC Staff Meeting on September 7, 2017
Fortress Transportation and Infrastructure Partners
Repauno Port Project

- Introductions
- Corporate Overview
- Description of the Proposed Facilities and Schedule
- Jurisdictional Discussion
- Questions and Follow-up

142 FERC ¶ 61,036
UNITED STATES OF AMERICA
FEDERAL ENERGY REGULATORY COMMISSION

Before Commissioners: Jon Wellinghoff, Chairman;
Philip D. Moeller, John R. Norris,
Cheryl A. LaFleur, and Tony T. Clark.

The Gas Company, LLC Docket No. CP12-498-000

ORDER DISMISSING REQUEST FOR SECTION 3 AUTHORIZATION

(Issued January 17, 2013)

1. On August 9, 2012, The Gas Company, LLC filed an application under section 3 of the Natural Gas Act (NGA)[1] requesting authorization to operate facilities to receive and vaporize domestic liquefied natural gas (LNG) transported from the Continental U.S., for distribution to end use customers in Hawaii. For the reasons discussed below, the Commission will dismiss the request for authorization, finding that the proposed project does not constitute an LNG terminal as envisioned under NGA section 3 and does not require any other authorization from the Commission.

I. Background and Proposal

2. The Gas Company is a limited liability company with its primary place of business in Honolulu, Hawaii.[2] The Gas Company is Hawaii's only government-franchised gas company. Its rates and terms and conditions of service are regulated by the Hawaii Public Utilities Commission. The Gas Company currently obtains synthetic natural gas (SNG), derived from naphtha-based feedstock (a by-product of petroleum refining), which it distributes to commercial and residential consumers on Oahu through approximately 965 miles of pipeline. The Gas Company also distributes propane throughout the state by pipeline, truck, and tank, and operates approximately 116 miles of pipeline on Maui, Hawaii, Kauai, Molokai, and Lanai for this purpose.

---

[1] 15 U.S.C. §§ 717f(b) and (c) (2006).

[2] The Gas Company also does business as Hawai'i Gas for select products and services and is a wholly-owned indirect subsidiary of Macquarie Infrastructure Company, LLC, a Delaware limited liability company.

3. Hawaii has no hydrocarbon reserves, and The Gas Company contends that even with the development of biofuel, geothermal, solar photovoltaic, kinetic, and other renewable sources, Hawaii relies on out-of-state supplies for over 90 percent of its energy needs. Although Hawaii has among the lowest per capita energy use in the U.S. (attributable in large part to its mild climate), it has the highest electric prices in the U.S. (approximately three times the national average). In view of this, The Gas Company argues its proposal to bring in natural gas as an additional energy source is in the public interest.

4. The Gas Company relies on a single source for its SNG: the Tesoro oil refinery in Kapolei, located just west of Honolulu. A 22-mile-long Gas Company pipeline extends from the SNG plant to Pier 38 in Honolulu Harbor, a point of interconnection with eight of The Gas Company's SNG distribution systems. The Gas Company explains that in response to concerns about the future reliability of its single SNG source – and in view of the typically high cost of the naphtha-based feedstock used to make SNG and the decline in the cost of natural gas – it has decided to supplement its SNG supplies by introducing LNG supplies to Hawaii. The Gas Company declares it "already has in place the necessary infrastructure and experienced workforce" and "already operates within the legal and regulatory framework necessary for delivering gas to business and residential customers throughout the state."[3]

5. The Gas Company plans to purchase up to 20 International Shipping Organization (ISO) containers, each with a 12,000-gallon capacity, which would be filled on the Continental U.S. with LNG from domestic sources and transported via container ship to The Gas Company's existing Pier 38 facilities in Honolulu Harbor, where The Gas Company's SNG supplies currently enter its pipeline distribution system.[4] Upon arrival, ISO containers would be attached to a mobile regasification unit[5] which would inject revaporized volumes into The Gas Company's existing pipeline facilities at Pier 38, or would be moved by truck and/or inter-island barge to various locations on The Gas

---

[3] The Gas Company's *Application* at p. 17. Although The Gas Company states it is contemplating future efforts to increase LNG supplies, those potential projects are beyond the scope of this proceeding. Here our consideration is limited to the proposed activities described in the application.

[4] Standard ISO containers have a 12,000-gallon capacity, however, The Gas Company states that due to load limits on road transport, its containers will be filled with no more than 8,600 gallons (approximately 710 Mcf) of LNG.

[5] Although The Gas Company expects to use a single regasification unit, it plans to hold a second unit in reserve as a backup.

Company's existing system, where the LNG containers would be similarly attached to a mobile regasification unit with revaporized volumes fed into existing Gas Company facilities for distribution. The Gas Company anticipates bypassing its own pipelines on occasion and making deliveries directly to an end user by attaching the revaporization unit to an end user's facilities.[6]

6. Although initial LNG deliveries are expected to be offloaded at Pier 38, because the same equipment is used to offload ISO container tanks as is used to handle other standard freight containers, The Gas Company observes that it may also take delivery of LNG by ISO container at Hawaiian ports other than Honolulu. In addition, depending on the ultimate injection locations, the ISO containers may be stored at secured locations anywhere along The Gas Company's distribution system. The Gas Company states that because all the planned transportation and distribution equipment is mobile, storage of the ISO containers and regasification units will not require the construction of any new facilities or structures, the modification of existing facilities or structures, or any land disturbances.

7. In this proceeding, The Gas Company is seeking authorization only to "operate" an LNG terminal. It asserts that because the facilities needed would "not require the disturbance of any land or modification of any existing structures, the [Gas] Company is not requesting authorization in this Application to site, construct or expand an LNG terminal."[7]

II. Notice and Interventions

8. Notice of The Gas Company's request for NGA section 3 authorization for its proposed project was published in the *Federal Register* on October 5, 2012.[8] Timely, unopposed motions to intervene were filed by the Blue Planet Foundation, the Hawaii Public Utilities Commission, Life of the Land, and the Sierra Club.[9] The Blue Planet Foundation, the Hawaii Department of Transportation, the Hawaii Public Utilities Commission, Henry Curtis, and the Sierra Club filed comments. The Gas Company

---

[6] The Gas Company explains that no compressor facilities will be required for its proposed project, because the ISO containers will provide sufficient pressure.

[7] The Gas Company's *Application* at p. 18.

[8] 77 FR 60972 (2012).

[9] Timely, unopposed motions to intervene are automatically granted by operation of Rule 214 of the Commission's regulations. 18 C.F.R. § 385.214 (2012).

submitted an answer to certain comments, to which the Blue Planet Foundation and the Sierra Club submitted answers. Generally, the comments and answers discuss the merits of the proposed project. Given our determination that no Commission authorization is required for The Gas Company to implement its project as described, we find no cause to address the comments or answers.

III. Discussion

9. Historically, NGA section 3 has only come into play when gas is transported between the U.S. and another country, not when gas is transported within the U.S. To date, *foreign* commerce, i.e., gas imports and exports and the facilities used to import or export gas, has been subject to section 3,[10] whereas *interstate* commerce, gas transported across state lines and the facilities used to do so, has been subject to section 7. Thus, The Gas Company's request for section 3 authorization – heretofore applicable only to projects importing or exporting gas – for a project that will depend on domestic supplies and not on foreign gas, constitutes a case of first impression.

10. The Gas Company maintains that its proposed project is subject to section 3 as a result of amendments to the NGA put in place by the Energy Policy Act of 2005 (EPAct 2005).[11] Prior to EPAct 2005, the Commission's section 3 jurisdiction was clearly limited to facilities, including LNG terminals, used to import gas from or export gas to a foreign country. EPAct 2005 added a definition of "LNG terminal" which includes all proposed LNG facilities that would receive or send out domestic gas supplies under certain circumstances.[12] This new definition, added as NGA section 2(11), reads as follows:

> "LNG terminal" includes all natural gas facilities located onshore or in State waters that are used to receive, unload, load, store, transport, gasify, liquefy, or process natural gas that is imported to the United States from a foreign

---

[10] NGA section 3 jurisdiction is shared: the Department of Energy (DOE) has jurisdiction over the commodity and authorizes the import and export of natural gas volumes (*see* 10 C.F.R. Part 590 of DOE's regulations); the Commission has jurisdiction over the facilities and authorizes the siting, construction, expansion, and operation of facilities used for the import or export of natural gas (*see* 18 C.F.R. Part 153 of the Commission's regulations).

[11] Pub. L. No. 109-58, 119 Stat. 594 (2005).

[12] Prior to EPAct 2005, section 3 was titled: "Exportation or Importation of Natural Gas" – to which EPAct 2005 added the term "LNG Terminals."

> country, exported to a foreign country from the United States, or transported in interstate commerce by waterborne vessel, but does not include –
>
> (A) waterborne vessels used to deliver natural gas to or from any such facilities; or
> (B) any pipeline or storage facility subject to the jurisdiction of the Commission under section 7.

This definition does not delimit an "LNG terminal" to a facility used to import gas from or export gas to a foreign country, but also encompasses facilities handling solely domestic gas, if the gas has been or will be "transported in interstate commerce by waterborne vessel." The Gas Company relies on this section 2(11) definition to conclude that its proposed project constitutes an "LNG terminal" subject to the Commission's section 3 jurisdiction.

11. We reach a different conclusion. For the reasons discussed below, based on the circumstances presented here, we do not believe the described facilities and operations constitute an LNG terminal as defined in section 2(11). Accordingly, we find no cause to assert jurisdiction under section 3 over the operation of the proposed project.

12. Further, although the proposed project would involve the transportation of gas in interstate commerce, we find that The Gas Company's described facilities and operations would be exempt from our section 7 jurisdiction by either NGA section 1(b), which exempts a company that provides only local distribution services, or section 1(c) (known as the "Hinshaw" exemption), which exempts a company if it receives all of its interstate gas supplies within its own state, all of the gas it receives is consumed in that state, and the company is subject to regulation by a state commission. Having determined that The Gas Company will neither be operating an LNG terminal subject to NGA section 3 nor engaged in the transportation of natural gas in interstate commerce subject to NGA section 7, we dismiss the application.

13. As described above, the proposed project will be limited to the shipment of ISO containers from the Continental U.S. to Hawaii. The Gas Company plans to initially take delivery of LNG containers at Pier 38 in Honolulu Harbor, at which point The Gas Company will (1) revaporize the LNG using a mobile regasification unit and inject it into The Gas Company's existing pipeline distribution system or (2) transport the LNG in the ISO containers away from the pier by truck and/or barge to various other points in Hawaii where The Gas Company will attach the containers to a mobile regasification unit in order to inject the revaporized gas into The Gas Company's existing pipeline system or directly into end users' facilities. The Gas Company asserts that these described operations should be viewed as constituting operation of an "LNG terminal" as contemplated by the section 2(11) definition. We disagree.

14. The existing pier facilities which will receive, load, and unload the vessels carrying the ISO containers of LNG are the same facilities currently receiving, loading, and unloading containers filled with other products.[13] We do not believe that these pier facilities constitute "natural gas facilities" as that term is used in the section 2(11) definition.

15. Further, we find that The Gas Company's proposed operations – specifically its use of regasification units to revaporize LNG from the ISO containers for injection into its pipeline distribution system or end users' facilities and its unloading, loading, and transportation of ISO containers – will be exempt from the Commission's NGA jurisdiction because The Gas Company qualifies as either an exempt local distribution company under section 1(b) or an exempt Hinshaw company under section 1(c). We do not agree with The Gas Company's contention that its operations would not qualify for section 1(c) Hinshaw status because "the Hinshaw exemption only applies ... if the gas is injected into a transportation system, as opposed to a local distribution system."[14] NGA section 1(c) does not make a distinction regarding the type of downstream in-state entity or facility which receives the natural gas. Thus, the criteria for the Hinshaw exemption can be satisfied regardless of whether the in-state pipeline system qualifies as an intrastate transmission system or a local distribution system. Moreover, to the extent the in-state entity and facilities are involved solely in the local distribution of gas, the Commission has no jurisdiction over them by virtue of section 1(b).

16. The Gas Company argues that a decision by the Commission to decline to assert jurisdiction "would be contrary to the intent of Congress to have the Commission provide uniform environmental and safety review of LNG terminals in the U.S."[15] The Gas Company further contends that the legislative history of EPAct 2005 supports the need for federal jurisdiction over siting and safety with respect to LNG terminals, and comments that state jurisdiction over LNG terminals would not be based on the overall energy needs of the nation.

17. We acknowledge that EPAct 2005 explicitly provides the Commission with exclusive authority over LNG terminals subject to our section 3 jurisdiction. However,

---

[13] The Gas Company indicates such interchangeability in noting its plans to move ISO containers from ship to truck and then from truck to ship "via standard cargo unloading procedures," which it states it may do at locations other than Honolulu. *Application* at p. 19.

[14] The Gas Company's *Application*, p. 31.

[15] *Id.* at p. 32.

as discussed above, based on the circumstances presented in this case, we have concluded that the proposed project would not constitute an LNG terminal as contemplated by Congress. Therefore, in this case we find no basis for asserting section 3 authority over the described facilities or operations. Moreover, uniform federal environmental and safety standards are already in effect and would apply to the proposed project. The Gas Company's existing facilities are subject to Department of Transportation standards, including Pipeline and Hazardous Materials Safety Administration safety standards.[16] In addition, ships bringing LNG or any other cargo to Hawaii would be subject to regulation by the Coast Guard. Because we find that the project would not fulfill the section 2(11) definition of an LNG terminal, we conclude we would have no jurisdiction over the project as an LNG terminal. We further find that although the project would involve the transportation of gas in interstate commerce, The Gas Company's proposed facilities and operations would be exempt from our NGA jurisdiction pursuant to either NGA section 1(b) or 1(c). Finally, we conclude that there is no call for the Commission to fill any regulatory gap, since the facilities and operations would be subject to safety and environmental provisions of other federal entities, principally the Department of Transportation and the Coast Guard. Accordingly, we dismiss The Gas Company's application.

18. The Commission on its own motion received and made a part of the record in this proceeding all evidence, including the application and exhibits thereto, as supplemented, submitted in support of the authorizations sought herein, and upon consideration of the record,

The Commission orders:

The Gas Company's application for NGA section 3 authorization for its proposed project is dismissed for the reasons discussed in the body of this order.

By the Commission.

(SEAL)

Nathaniel J. Davis, Sr.,
Deputy Secretary.

---

[16] *See* 49 C.F.R. Parts 190-193 (2012).

Document Content(s)

148 FERC ¶ 61,219
UNITED STATES OF AMERICA
FEDERAL ENERGY REGULATORY COMMISSION

Before Commissioners: Cheryl A. LaFleur, Chairman;
Philip D. Moeller, Tony Clark,
and Norman C. Bay.

Emera CNG, LLC Docket No. CP14-114-000

ORDER ON PETITION FOR DECLARATORY ORDER

(Issued September 19, 2014)

1. On March 20, 2014, Emera CNG, LLC (Emera) filed a petition[1] requesting that the Commission declare that Emera's construction and operation of facilities to produce compressed natural gas (CNG) that will be transported by trucks to ships for export to the Commonwealth of the Bahamas will not be subject to the Commission's jurisdiction under the Natural Gas Act (NGA).[2]

2. For the reasons discussed herein, we grant the petition for a declaratory finding that Emera's proposed facilities and operations will not be subject to the Commission's jurisdiction under the NGA.

I. Notice, Intervention, and Protest

3. Notice of Emera's petition was published in the *Federal Register* on March 28, 2014.[3] Timely motions to intervene were filed by Floridian Natural Gas Storage Co., LLC (Floridian) and Pivotal LNG, Inc.[4] Floridian filed a protest, to which Emera submitted an answer. Although the Commission's Rules of Practice and Procedure do

[1] Emera's *Petition for a Declaratory Order* (*Petition*) was submitted pursuant to Rule 207 of the Commission's Rules of Practice and Procedure, 18 C.F.R. § 385.207 (2014).

[2] 15 U.S.C. § 717, *et seq*. (2012).

[3] 79 Fed. Reg. 17,528 (Mar. 28, 2014).

[4] Pivotal LNG's timely, unopposed motion to intervene was granted by operation of Rule 214 of the Commission's Rules of Practice and Procedure. 18 C.F.R. § 385.214 (2014).

not permit answers to protests,[5] we find good cause to waive this rule to admit the answer, as doing so will not cause undue delay at this stage of the proceeding and information in the pleading will assist in the decision-making process.

4. Floridian has been granted certificate authorization under NGA section 7 to construct storage, liquefaction, revaporization, and liquefied natural gas (LNG) truck-loading facilities in Florida at a location approximately 35 miles from the contemplated site for Emera's planned CNG and truck-loading facilities.[6] Floridian argues that the Commission's assertion of jurisdiction over Emera's CNG facilities is necessary to ensure that Emera's operations are "environmentally-sound, as well as safe and secure," and to prevent a regulatory gap that would give Emera an unfair competitive advantage.[7] Emera argues that Floridian does not have an interest justifying its participation in this proceeding, since it will not be a consumer of CNG or a customer of Emera, and Floridian's LNG operations will not be in direct competition with Emera's CNG operations, since LNG is not a substitute for CNG.[8]

---

[5] Rule 213(a)(2), 18 C.F.R. § 385.213(a)(2) (2014).

[6] *See Floridian*, 124 FERC ¶ 61,214 (2008) (order granting certificate), and 140 FERC ¶ 61,167 (2012) (order amending certificate). Floridian will receive its storage customers' gas from interconnections with two interstate pipelines and liquefy the gas for storage as LNG. Although Floridian's facilities will include LNG truck-loading equipment, most of the LNG in storage will be revaporized and reinjected directly into the interstate pipeline grid. On August 15, 2013, the Commission issued a letter order granting Floridian an extension until August 29, 2014, to complete construction and make its authorized facilities available for service. *See* August 15, 2013 letter order issued in Docket No. CP08-13-000 by the Director of the Division of Pipeline Certificates, Office of Energy Projects. On September 4, 2013, Floridian filed an application to amend its existing authorization to modify its facilities by substituting a 1 Bcf storage tank for the initially planned 4 Bcf tank and reducing the associated vaporization. That application is pending. On August 7, 2014, Floridian filed a request for a further extension of time, which was granted on August 11, 2014, providing Floridian until August 29, 2015, to complete construction of its authorized facilities and make them available for service.

[7] Floridian's April 18, 2014 Motion to Intervene at 10.

[8] Rule 214 provides the right to participate in a proceeding to a person that "has or represents an interest which may be directly affected by the outcome of the proceeding." 18 C.F.R. § 385.214(b)(ii) (2014).

5. We find that Floridian has demonstrated an interest sufficient to allow its participation as a party in this proceeding. Accordingly, Floridian's motion to intervene is granted.

II. Emera's Petition for a Declaratory Order

6. Emera[9] proposes to construct a CNG compression and truck-loading facility at the existing Port of Palm Beach in Riviera Beach, Florida, in order to export CNG to the Commonwealth of the Bahamas. Emera states that it has filed an application with the Department of Energy (DOE) for authorization to export CNG.[10] Emera plans to receive natural gas at its planned compression facility from the Riviera Lateral, a pipeline owned and operated by Peninsula Pipeline Company.[11] Emera comments that although the

---

[9] Emera is a limited liability company, formed under the laws of Delaware, with its primary place of business in West Palm Beach, Florida. Emera is a wholly owned, indirect subsidiary of Emera Inc., which is a Canadian corporation.

[10] Emera filed its application for export authorization with DOE's Office of Fossil Energy (FE) on November 20, 2013, seeking long-term authorization to export CNG to both free trade and non-free trade countries, which was granted on June 13, 2014, in DOE/FE Order No. 3447. The Department of Energy issued a notice of the application in the *Federal Register* on July 3, 2014. 79 Fed. Reg. 38,017. Section 301 of the Department of Energy Organization Act of 1977 transferred the regulatory functions of NGA section 3 from the Federal Power Commission (this Commission's predecessor) to the Secretary of Energy. DOE Organization Act, 42 U.S.C. § 7151 (2012). The Secretary subsequently delegated back to the Commission the authority over the siting, construction, and operation of gas import and export facilities. Specifically, the Commission has been delegated section 3 authority to "approve or disapprove the construction and operation of particular facilities, the site at which such facilities shall be located, and with respect to natural gas that involves the construction of new domestic facilities, the place of entry for imports or exit for exports." The Commission's current delegated authority over section 3 functions is provided by DOE Delegation Order No. 00-004.00A, which was effective May 16, 2006. Applications for authorization to import or export natural gas (the commodity) must be submitted to DOE.

[11] Emera's petition indicates that Peninsula Pipeline Company operates as a "Hinshaw pipeline company," exempt pursuant to NGA section 1(c) from the Commission's jurisdiction over the interstate transportation and sale for resale of natural gas. NGA section 1(c), added in 1954, Pub. L. 323, 83rd Cong., 2nd. Sess. (1954), is referred to as the "Hinshaw amendment" because section 1(c)'s exemption was sponsored by Representative Carl Hinshaw of California. *See House of Representatives Hearing Before a Subcommittee of the Committee on Interstate and Foreign Commerce*

(continued...)

described CNG facility would be the principal source of its CNG for export, during maintenance at its facility or at the Port of Palm Beach, Emera may obtain CNG from other sources and/or export CNG via other general-use Florida port facilities.

7. Emera's CNG plant would include facilities to receive, dehydrate, and compress gas to fill International Standards Organization (ISO) containers and load the ISO containers onto trucks. Emera states that the proposed CNG facility would initially be capable of loading 6 million cubic feet per day (MMcf/d) of CNG into ISO containers and would be capable of expanding to load up to 25 MMcf/d. Emera plans to truck the ISO containers a distance of approximately a quarter mile from its proposed CNG facility to a berth at the Port of Palm Beach where the containers will be loaded onto a roll-on/roll-off ocean-going carrier.

8. Emera states that it intends to send CNG containers from Florida to Freeport, Grand Bahama Island, where the containers would be unloaded, the CNG decompressed and injected into a pipeline for transport to electric generation plants owned and operated by Grand Bahama Power Company (Bahama Power), an Emera affiliate.[12] Bahama Power's electric generation plants currently are powered by heavy fuel oil and diesel. In addition to diversifying Bahama Power's fuel sources, Emera expects that retrofitting the plants to burn natural gas will reduce and stabilize customer electricity rates and stimulate economic growth in the Bahamas. Emera also plans to market its CNG to other customers that are able to access the pipeline on Grand Bahama Island.

III. Response

9. As discussed below, we find that the construction and operation of the CNG facility described by Emera will not be subject to our authority under the NGA.

A. NGA Section 3 Authority over Emera's Facility

10. While the stated purpose of Emera's CNG facility will be to compress gas so that it can be exported in ISO containers, the facility will be subject to our section 3 jurisdiction only if we find it will be an "export facility." Floridian argues that Emera's

---

on H.R. 5976, at 19-28, June 29, 1953, 83rd Congress, 1st Sess. (H.R. 5976), Reproduced in *Natural Gas Act, Legislative History* (Roach, F. and Gallagher, W.), Vol. II, at 23 (1968). The Hinshaw amendment exempts from Commission jurisdiction a qualifying pipeline company's transportation and sales for resale of interstate gas supplies that will be consumed within the state but that do not qualify as local distribution – e.g., deliveries of system supplies to a local distribution company.

[12] Emera owns 80.4 percent of Bahama Power.

facility will constitute a jurisdictional natural gas export facility, and thus, its siting, construction, and operation are subject to the Commission's jurisdiction.

11. In support of its position, Floridian emphasizes that section 1(b) provides that the NGA applies not only "to the importation and exportation of natural gas in foreign commerce" but also to "persons engaged in such importation or exportation," pointing to the fact that Emera will be operating its CNG facility to implement its exports. While Floridian acknowledges that the Commission has no jurisdiction over the truck traffic between the CNG facility and the site where ISO containers will be transferred to and from ocean-going carriers, Floridian disputes Emera's position that this quarter-mile transit by truck should prevent section 3 jurisdiction from attaching to Emera's CNG facility as an export facility, given Floridian's point of view that the point of export is the Port of Palm Beach. Floridian further asserts that Emera's facility will be subject to the Commission's exclusive jurisdiction under section 3 as an "LNG terminal," as that term was defined by the Energy Policy Act of 2005 (EPAct 2005).[13]

12. Floridian asserts that failure by the Commission to assert jurisdiction over Emera's facility will give operators like Emera an unfair competitive advantage over companies subject to the Commission's jurisdiction. Floridian also charges that the public interest

---

[13] Pub. L. No. 109-58, 119 Stat. 594 (2005). EPAct 2005 added NGA section 2(11) to define "LNG Terminal" as follows:

> "LNG Terminal" includes all natural gas facilities located onshore or in State waters that are used to receive, unload, load, store, transport, gasify, liquefy, or process natural gas that is imported to the United States from a foreign country, exported to a foreign country from the United States, or transported in interstate commerce by waterborne vessel, but does not include –
>
> (A) waterborne vessels used to deliver natural gas to or from any such facilities; or
>
> (B) any pipeline or storage facility subject to the jurisdiction of the Commission under section 7.

In addition, EPAct 2005 added section 3(e)(1) to provide that "[t]he Commission shall have the exclusive authority to approve or deny an application for the siting, construction, expansion, or operation of an LNG terminal."

requires that the Commission ensure that natural gas facilities are constructed and operated in an environmentally-sound, safe and secure manner.[14]

13. The Commission has interpreted and exercised its delegated section 3 jurisdiction over import and export facilities consistent with its interpretation and exercise of its section 7 jurisdiction over facilities used to transport gas in interstate commerce. The Commission has found that its section 7 jurisdiction over interstate transportation is limited to the transportation of gas by pipeline.[15] Similarly, to date, the Commission has only exercised its authority under section 3 over import and export facilities to regulate: (1) pipelines that transport natural gas to or from the United States' international borders; and (2) coastal LNG terminals that are accessible to ocean-going LNG tankers and connected to pipelines that deliver gas to or take gas away from the terminal. Emera's facility will not include a pipeline to deliver gas to an international border or be capable of transferring CNG directly into an ocean-going carrier for export. Thus, we find that Emera's facilities to compress and load CNG onto trucks are unlike the border-crossing pipelines and coastal LNG terminals that the Commission traditionally has regulated

---

[14] Floridian's *Motion for Leave to Intervene and Comments* at 10.

[15] *See Exemption of Certain Transp. and/or Sales of LNG from the Requirements of Section 7(c) of the NGA*, 49 F.P.C. 1078, at 1079 (1973). In this order terminating a rulemaking proceeding, the Commission concluded from legislative history and statutory construction that the Commission does not have section 7 jurisdiction over gas being moved by non-pipeline modes of transportation because Congress enacted the NGA specifically to address *pipeline*-related abuses. However, the Commission has asserted jurisdiction over facilities used to liquefy or compress gas for delivery by non-pipeline modes of transportation where necessary to prevent circumvention of the Commission's jurisdiction over the interstate transportation of gas by pipeline. For example, in *Wisconsin Gas Company*, 53 FPC 2198 (1975), the Commission asserted section 7 jurisdiction over an LDC's liquefaction facility because it was being used to load trucks with LNG for delivery to an affiliated LDC to implement an exchange arrangement involving the displacement of gas moving on an interstate pipeline and a jurisdictional sale for resale. Similarly, in *Natural Gas Company*, 55 FPC 919 (1976), the Commission asserted section 7 jurisdiction over an exchange arrangement where an LDC purchasing gas from an interstate pipeline had the interstate pipeline deliver its gas to another LDC that liquefied the gas and redelivered it as LNG by truck. In both these cases, although the Commission found that trucking LNG effectively substituted for flowing gas by pipeline, the Commission did not seek to assert jurisdiction over the trucking operations.

under section 3 as import/export facilities, and more like existing, unregulated facilities that deliver LNG into trucks which are subsequently driven across the border into Canada or Mexico.[16]

14. Further, we reject Floridian's contention that we should interpret NGA section 2(11)'s definition of LNG terminal to include Emera's planned CNG facility. While it is true that Emera's facility will be "located onshore" and "used to receive, . . . load, . . . transport, . . . or process natural gas that is . . . exported to a foreign country," Floridian would have us read "LNG" out of the term "LNG terminal." Floridian's efforts to draw parallels between Emera's proposed CNG facility and LNG terminals are unavailing, as the capabilities of Emera's CNG facility will be confined to compressing, and not liquefying, natural gas. Floridian provides no evidence of any expression of Congressional intent that the EPAct 2005 revisions to NGA section 3 should apply to facilities that produce or transport natural gas in other than a liquid state.

15. Floridian argues that the Commission's failure to assert jurisdiction over Emera's facilities and services will result in a regulatory gap that will give Emera and other companies engaged in similar operations an unfair competitive advantage over companies like Floridian, whose facilities and services, including their LNG truck-loading services, are subject to the Commission's regulatory authority. Floridian argues that this regulatory gap would be contrary to the public interest because Emera will be able to construct and operate its CNG facility without being subject to the Commission's prior environmental and safety review.

16. We observe, as the court explained in *ExxonMobil Gas Marketing Company v. FERC*, the "need for regulation cannot alone create authority to regulate," and "jurisdiction may not be presumed based solely on the fact that there is not an express withholding of jurisdiction."[17] We further note that the fact that this Commission does

---

[16] For example, Xpress Natural Gas (XNG) has a CNG plant in Maine that receives gas from an interstate pipeline and loads CNG containers onto trucks for delivery to customers in Canada and in New England. The Commission does not regulate the CNG facility under either section 3 or 7, nor does it exercise jurisdiction over the trucks' passage across the border under section 3. Further, the Commission has never issued authorization under section 3 to designate points of import or export for gas carried by truck, train, or waterborne vessel or authorized the site of, or construction and operation of, any complementary facility, such as a road, bridge, railway, or stand-alone pier, needed to import or export gas by a non-pipeline mode of transportation. However, regardless how natural gas is transported, all imports and exports of natural gas require section 3 authorization from the DOE's Office of Fossil Energy.

[17] 297 F.3d 1071, 1088 (D.C. Cir. 2002).

not have NGA jurisdiction over Emera's CNG facility does not mean that other federal, state, and local regulatory agencies lack the authority to impose environmental and safety conditions on the construction and operation of Emera's CNG facility. Emera's facility, the pipeline delivering the gas, and the trucking operations will be subject to the U.S. Department of Transportation's (DOT) regulations and requirements addressing the transportation and storage of hazardous materials.[18] The ships carrying the CNG containers and docks at the ports where the containers will be loaded on to the ships will be subject to the U. S. Coast Guard's requirements and restrictions. The port authorities also will exercise oversight. In addition, the facilities and activities involved in Emera's export operations will be subject to regulations and requirements of the U.S. Environmental Protection Agency under its various enabling statutes, including the Clean Water Act, Clean Air Act, and the Hazardous Materials Transportation Act.

17. We have found that Emera's planned facilities and operations will not be subject to our NGA jurisdiction. Therefore, we have no more ability to address Floridian's perceived unfair competition to its jurisdictional LNG trucking-loading operations for its storage customers than we would if Floridian were facing competition from a distributor of propane or fuel oil over which we similarly have no jurisdiction.[19]

18. Given this, we reject Floridian's claim that Emera will inhabit a regulatory gap; rather, we view Floridian and Emera as operating different types of facilities, each subject to different (and in part, overlapping) regulatory regimes.[20]

---

[18] DOT's regulations are set forth in Title 49 of the U.S. Code of Federal Regulations. DOT's Office of Hazardous Materials Safety develops and coordinates implementation of hazardous materials regulations with DOT's various operating administrations, including the Office of Pipeline Safety, Federal Highway Administration, and Federal Railroad Administration.

[19] We note that in issuing Floridian's section 7 certificate, Floridian sought and the Commission granted market-based rate authority, based in part on the existence of numerous competitors serving the same region, which should preclude Floridian from wielding significant market power. 124 FERC ¶ 61,214 at PP 24-33.

[20] While Emera will not be subject to our oversight, it may need to comply with requirements imposed by, among others, the United States Department of Transportation's Pipeline and Hazardous Materials Administration and Federal Motor Carrier Safety Administration, the United States Coast Guard, the Florida Public Service Commission, the Florida Bureau of Fire Prevention, and the Port of Palm Beach District.

B. NGA Section 7 Authority over Gas in Interstate Commerce

19. Emera also requests that the Commission declare that the proposed facilities will not be subject to its authority under section 7 of the NGA. As presented in its petition, all of the natural gas to be compressed at Emera's planned facility will be exported in foreign commerce to the Commonwealth of the Bahamas. Thus, on its face it seems that the Commission's section 7 jurisdiction over transportation and sales of gas for resale in interstate commerce would not be implicated by Emera's proposal. Further, gas compressed at Emera's facility will not be loaded directly onto ships for export. Rather, Emera will compress gas into containers which will be moved by truck to a dock where the containers will be loaded onto a ship for export. It is well settled that the Commission's jurisdiction over transportation and sales in interstate commerce only applies to gas that is transported by pipeline.[21] Moreover, as noted above, Emera will be receiving its gas from a non-jurisdictional Hinshaw pipeline. Since the gas will have left jurisdictional interstate commerce before reaching Emera and will never re-enter interstate commerce (i.e., will not be transported from Florida to another state), our section 7 jurisdiction will not attach to the Emera facility.

20. In view of the above considerations, we find that Emera's CNG facilities and services will not be subject to the Commission's jurisdiction under NGA section 3 as a

---

[21] *See Order Terminating Proposed Rulemaking Proceeding*, 49 FPC 1078, 1081 (1973). The Commission has declined on several occasions to exercise jurisdiction over the movement of LNG by non-pipeline modes of transportation. *See Marathon Oil Company (Marathon)*, 53 FPC 2164, at 2175 (1975), where in response to contentions that it should find that section 7 jurisdiction would apply to the tankers that would transport LNG from Alaska to Oregon because "pipeline" is only mentioned once in the NGA (in section 7(h)), the Commission pointed out that "Section 7 is phrased in terms of 'extend,' 'physical connection,' 'abandon,' and 'construct,' all of which relate to stationary, not movable, facilities." *See also Southern LNG Inc.*, 131 FERC ¶ 61,155 (2010) and *New England LNG Co., Inc.*, 49 FPC 1460 (1973) (transportation of LNG by truck); *Distrigas of Massachusetts Corporation*, 55 FPC 3121 (1976) (transportation of LNG by barge and truck); and *Wisconsin Gas Company*, 53 FPC 2198 (1975) (transportation of LNG by truck). Although the cited decisions address gas in a liquid state, the Commission's reasoning is equally applicable to gas vapor, e.g., CNG, being moved by a non-pipeline mode of transportation.

natural gas export facility or as an LNG terminal, or under section 7 as a facility used to transport gas or as an entity making sales for resale of gas in interstate commerce. [22]

The Commission orders:

(A) Emera's petition for a declaratory finding that its proposed CNG facilities and export operations will not be subject to the Commission's jurisdiction under the NGA is granted.

(B) Floridian's motion to intervene is granted.

By the Commission. Commissioner Bay is dissenting with a separate statement attached.

(SEAL)

Nathaniel J. Davis, Sr.,
Deputy Secretary.

---

[22] Emera states that during periods of maintenance at either its CNG facility or the Port of Palm Beach, it may have CNG from other sources delivered by trucks to the Port of Palm Beach or to general-use docks at other Florida ports. To the extent that these alternative arrangements conform to Emera's description of its planned facilities and services at the Port of Palm Beach – e.g., gas will be received in state from an NGA-exempt facility, compressed and transported exclusively by truck in state, sold once to a foreign entity, and exported from a general-use dock – then the conclusions we reach with respect to Emera's planned CNG operations will apply to its potential alternative CNG operations. With respect to using other ports as points of export (Emera identifies Port Everglades, the Port of Miami, Port Canaveral, and the Port of Jacksonville as possible candidates), doing so will not subject these general-use facilities to our jurisdiction under NGA section 3. We found in *The Gas Company, LLC,* 142 FERC ¶ 61,036, at P 14 (2013), that general-use pier facilities would not become section 3 jurisdictional LNG terminal facilities if used for ISO containers of LNG because "[w]e do not believe these pier facilities constitute 'natural gas facilities' as that term is used in the section 2(11) definition [of LNG terminal]." We similarly find that using general purpose ports to handle ISO containers of CNG will not cause the port facilities to become jurisdictional natural gas export facilities subject to our section 3 jurisdiction.

UNITED STATES OF AMERICA
FEDERAL ENERGY REGULATORY COMMISSION

Emera CNG, Inc. Docket No. CP14-114-000

(Issued September 19, 2014)

BAY, Commissioner, *dissenting*:

In enacting the Natural Gas Act, Congress emphasized the importance of regulating the sale of gas in foreign commerce. In section 1(a), Congress declared that "Federal regulation in matters relating to the transportation of natural gas and the sale thereof in interstate and foreign commerce is necessary in the public interest." 15 U.S.C. § 717(a). In section 1(b), Congress stated that the provisions of the Act "shall" apply to "the importation or exportation of natural gas in foreign commerce and to persons engaged in such importation or exportation." *Id.* § 717(b). If there were any lingering doubt over congressional intent, section 3 removes it when the Act refers to foreign commerce a third time: "[N]o person shall export any natural gas from the United States to a foreign country or import any natural gas from a foreign country without first having secured an order of the Commission authorizing it to do so." *Id.* § 717b(a). As a result, the Commission exercises authority over the siting, construction, operation, and maintenance of export facilities in order to ensure that any authorized exports will serve the public interest. *See, e.g., NET Mex. Pipeline Partners, LLC*, 145 FERC ¶ 61,112, P 13 (2013).

Here, Emera's facilities fall within the four corners of the statute. They are facilities involving natural gas intended for export to a foreign country. As the majority acknowledges, "the stated purpose of Emera's CNG facility will be to compress gas so that it can be exported in ISO containers" to the Commonwealth of the Bahamas. Order P 10. Not surprisingly, perhaps, Emera has applied to the Department of Energy– under section 3 of the Natural Gas Act – "for long-term authorization to export CNG from" its proposed facility, and properly so. *See* 79 Fed. Reg. 38,017, 38,018 (July 3, 2014). Yet, in the majority's view, that very same facility is not an "export facility" under section 3.

Of course, this raises the question of how what would plainly appear to be a gas export facility is not, in fact, an export facility. The majority's argument seems to be that because the CNG will leave Emera's facility by truck and travel a quarter of mile before being loaded onto ocean-going carriers for export – rather than by a pipeline running across a border or to a tanker – the facility is not an "export facility" under section 3 of the Natural Gas Act. *Id.* P 13. It cannot be that the Commission's jurisdiction turns on this 440-yard truck journey.

The majority suggests that the scope of the Commission's jurisdiction under section 3 must be consistent with section 7 of the Natural Gas Act. Jurisdictional export facilities – other than "LNG terminals" – thus must have the defining characteristic of interstate transportation facilities, namely a send-out pipeline. Order P 13. But conflating section 3 with section 7 is not supported by the language of the statute. Section 7 speaks of natural gas "transportation facilities," 15 U.S.C. § 717f; section 3 does not, *id.* § 717b. And none of the language which led the Commission to conclude that section 7 is limited to transportation by pipelines is present in section 3 (nor any of the related delegation and executive orders). *See, e.g., Exemption of Certain Transp. and/or Sales of LNG from the Requirements of Section 7(c) of the NGA*, 49 F.P.C. 1078, 1079-80 (1973) (discussing Commission's section 7 jurisdiction). Moreover, section 1(b) demonstrates the breadth of the Act by making a distinction between interstate transportation or sales on the one hand, and importation and exportation on the other, all of which are covered. *See* 15 U.S.C. § 717(b) (applying the Act to "natural gas companies engaged in such transportation or sale, <u>and</u> to the importation or exportation of natural gas in foreign commerce and to persons engaged in such importation or exportation") (emphasis added).

The result reached by the majority also suggests that, if the boundaries of a facility do not encompass the actual point of export, it cannot be an "export facility" under section 3. But the Department of Energy Delegation Order providing the Commission with authority over export facilities differentiates between the place of export and the facilities necessary to implement that export, and gives no indication that the former must be located within the latter. *See* DOE Delegation Order No. 00-004.00A, at ¶ 1.21.A (delegating to FERC, with respect to "the imports and exports of natural gas," the authority to "[a]pprove or disapprove the construction and operation of particular facilities, the site at which such facilities shall be located, and with respect to natural gas that involves the construction of new domestic facilities, the place of entry for imports or exit for exports").

As a policy matter, one could certainly debate the merits of whether or not FERC should assert jurisdiction over Emera's export facility. But where Congress has spoken there is no room for such a debate. Here, Congress's intent is clear: federal regulation over the sale of gas in foreign commerce "is necessary in the public interest." 15 U.S.C. § 717(a).

That Congress might require federal oversight of foreign commerce should not be a surprise. *See, e.g., Michelin Tire Corp. v. Wages*, 423 U.S. 276, 285 (1976) ("the Federal Government must speak with one voice when regulating commercial relations with foreign governments"). The Commission itself has previously recognized that "[t]he nation's energy needs are best served by a uniform national policy" applicable to the export or import of natural gas in foreign commerce. *Sound Energy Solutions*, 106 FERC ¶ 61,279, P 27 (2004). The Commission's ability to implement any such national policy may now be subject to the vagaries of where an exporter chooses to put the fence around its facility or by the trucking of gas a short distance to the docks.

In my view, regardless of the manner in which the CNG leaves Emera's plant, the facility should be called what it is: a natural gas export facility. Accordingly, I respectfully dissent from the determination that Emera's facilities are not subject to the Commission's jurisdiction under section 3 of the Natural Gas Act.

Norman C. Bay
Commissioner

Document Content(s)

148 FERC ¶ 61,163
UNITED STATES OF AMERICA
FEDERAL ENERGY REGULATORY COMMISSION

Before Commissioners: Cheryl A. LaFleur, Chairman;
Philip D. Moeller, Tony Clark,
and Norman C. Bay.

Shell U.S. Gas & Power, LLC Docket No. RP14-52-000

ORDER ON PETITION FOR DECLARATORY ORDER

(Issued September 4, 2014)

1. On October 16, 2013, Shell U.S. Gas & Power, LLC (Shell) filed a petition in Docket No. RP14-52-000.[1] Shell requests the Commission declare that, by virtue of the exemption in section 1(d) of the Natural Gas Act (NGA)[2] for the transportation and sale of natural gas that will be used as vehicular fuel, Shell will not be subject to any provisions of the NGA as a result of its importing liquefied natural gas (LNG) from Canada, liquefying domestic gas, and transporting Canadian and domestic LNG by truck, train, and waterborne vessel between states for the purpose of selling the LNG for use as fuel for vehicles, with any excess LNG being sold as fuel for non-vehicular uses.

2. We find herein, for reasons that do not rely on the exemption provided by NGA section 1(d) for vehicular gas, that Shell will not need to apply to the Commission for authorization under NGA section 3 or section 7 for any of its planned facilities and activities.

I. Notice and Intervention

3. Notice of Shell's petition was published in the *Federal Register* on October 29, 2013.[3] Timely, unopposed motions to intervene were filed by Encana Natural Gas Inc.

---

[1] Shell's *Petition for a Declaratory Order* (*Petition*) was submitted pursuant to Rule 207 of the Commission's Rules of Practice and Procedure, 18 C.F.R. § 385.207 (2014).

[2] 15 U.S.C. § 717, *et seq*. (2012).

[3] 78 Fed. Reg. 64,490-01 (Oct. 29, 2013).

(Encana), the Natural Gas Vehicle Coalition (NGV Coalition),[4] Noble Energy, Inc., and Pivotal LNG, Inc. (Pivotal).[5] An untimely motion to intervene was filed by Clean Energy Fuels Corporation, which we will grant, as we find that to do so will not delay, disrupt, or otherwise prejudice this proceeding or the parties thereto.

II. Shell's Request for a Declaratory Order

4. Shell anticipates an expansion in the use of LNG (1) as fuel to propel both waterborne vessels and surface vehicles, and (2) as fuel for non-vehicular uses, e.g., to power compressors and other field equipment used in oil and gas exploration and production operations. This has prompted Shell to prepare to install a natural gas liquefaction unit at its Sarnia Manufacturing Centre on the shore of Lake Huron in Sarnia, Ontario, Canada, with the intent to import LNG into the United States by means of truck, train, and waterborne vessel for use as fuel for vehicular and non-vehicular uses.[6] In addition, Shell contemplates constructing an intermediate docking and storage facility near Detour, Michigan, and possibly similar facilities at other locations on the Great Lakes, to transfer LNG being imported from Canada directly from one moored ship to another, or to transfer Canadian LNG from ship to shore for storage and subsequent distribution by truck or train.

5. Shell is also considering constructing a liquefaction unit at its Geismar Chemical Plant located along the Mississippi River in Geismar, Louisiana, which would liquefy domestically-produced natural gas. Shell indicates that as gas is liquefied it would be loaded from the existing dock at its Geismar chemical plant to waterborne vessels that would transport LNG (1) to other waterborne vessels which would use the LNG as fuel, or (2) to on-shore storage facilities, including facilities in other states, for subsequent

---

[4] Encana and NGV Coalition each state support for Shell's request.

[5] Timely, unopposed motions to intervene are granted by operation of Rule 214 of the Commission's Rules of Practice and Procedure. 18 C.F.R. § 385.214 (2014).

[6] Shell states that it plans to construct up to 100 LNG fueling stations throughout the United States at existing Travel Centers of America truck stops. Shell expects the Sarnia, Ontario, facility to supply LNG to the upper Midwest region, and potentially beyond, using trucks that can each carry a cargo of up to 10,000 gallons of LNG to fueling stations, which will be equipped with storage tanks that will hold 15,000 to 20,000 gallons of LNG.

transfer to other waterborne vessels for use as fuel, or to trucks or trains for transport to fueling facilities.[7]

6. Shell asks the Commission to find that its importation of Canadian LNG, liquefaction of domestic gas, and transportation and storage of LNG in the United States will not subject Shell to NGA jurisdiction.[8] As the basis for its belief that all the activities and facilities described in its petition will be NGA-exempt, Shell primarily relies on NGA section 1(d), which provides an exemption from the NGA's jurisdiction for the transportation and sale of natural gas by otherwise non-NGA-jurisdictional persons if the gas will be used as vehicular fuel. Shell asserts the Commission has interpreted section 1(d) to also exempt other non-vehicular end uses of gas, and as a result, concludes that all the activities and facilities described in its petition should be NGA-exempt.

---

[7] More specifically, Shell explains that its waterborne LNG vessels arriving at a facility on the Great Lakes or leaving the dock at the Geismar, Louisiana, facility, may:

(1) transfer LNG away from a pier in open water to ships that burn the LNG as fuel;
(2) transfer LNG to a vehicle to be used as fuel, with the vehicle moored to Shell's delivery vessel, which would be moored to a pier;
(3) transfer LNG from a pier where Shell's delivery vessel is moored to refuel a ship moored to the other side of the same pier with connections crossing the pier;
(4) transfer LNG from a pier into shore storage, from which vehicles would be refueled from the shore storage across the same pier or, alternatively, from which bunkering vessels would be loaded from the shore storage across the same pier; and
(5) transfer LNG from a pier into shore storage, from which the LNG would be redistributed by truck or train transport to fueling stations.

[8] NGA section 1(b) declares the Commission's jurisdiction shall apply to the transportation and the sale for resale of gas in interstate commerce; NGA sections 4 and 7 describe how the Commission is to exercise aspects of that jurisdiction. We will refer herein to 'section 7' to designate the full range of the Commission's regulatory authority over the transportation and sale for resale of gas in interstate commerce. NGA section 3, which provides for Commission jurisdiction over gas in foreign commerce, is described and discussed below.

III. Commission Response

7. NGA section 1(b) states that the provisions of the NGA shall apply (1) to the transportation and sale for resale of natural gas in interstate commerce and natural gas companies engaged in such transportation and sales and (2) to the importation and exportation of natural gas in foreign commerce and persons engaged in such importation and exportation.[9] Section 3 of the NGA provides that no person shall export or import natural gas without prior Commission authorization.[10] Section 7 of the NGA requires that a natural gas company or person that will be a natural gas company obtain a certificate of public convenience and necessity from the Commission before undertaking jurisdictional transportation and sales for resale of natural gas in interstate commerce or the construction or operation of facilities to engage in natural gas transportation that is subject to the Commission's jurisdiction.[11]

---

[9] Prior to the Energy Policy Act of 2005 (EPAct 2005), Pub. L. No. 109-58, 119 Stat. 594 (2005), NGA section 1(b) did not include any reference to foreign commerce. EPAct 2005 amended section 1(b) to clarify that the provisions of the NGA also apply, by reason of section 3, "to the importation or exportation of natural gas in foreign commerce and to persons engaged in such importation or exportation."

[10] Following enactment of the NGA in 1938, the Commission did not initially view its section 3 jurisdiction over the importation and exportation of natural gas as including jurisdiction over the construction and operation of any facilities needed to import or export gas. Rather, the Commission only exercised jurisdiction over import and export facilities under delegated executive authority to act upon applications for Presidential Permits for the construction and operation of pipeline facilities at the borders with Mexico and Canada to import and export volumes of natural gas in vapor form. *See, e.g., United Gas Pipe Line Company,* 2 FPC 775 (1940), and *Montana Power Company,* 11 FPC 1 (1951). However, in 1974 the D.C. Circuit Court held that the Commission's section 3 "authority over imports of natural gas is at once plenary and elastic," and thus "it is fully within the Commission's power [under NGA section 3], so long as that power is responsibly exercised, to impose on imports of natural gas the equivalent of Section 7 certificate requirements *both as to facilities and ... sales within and without the state of importation."* (*Emphasis added.*) *Distrigas Corporation v. FPC,* 495 F.2d 1057, at 1064 (D.C. Cir. 1974), *cert. denied*, 419 U.S. 834 (1974).

[11] Section 4 of the NGA provides that the rates, terms, and conditions for service filed by natural companies for jurisdictional gas sales and transportation service must be just and reasonable and not unduly preferential or discriminatory. Section 5 of the NGA provides for the Commission to take prospective remedial action under that section if it determines that any previously approved rate, charge, or classification by a natural gas

(continued...)

8. Section 301 of the Department of Energy Organization Act of 1977 transferred all jurisdiction under NGA sections 3 and 7 from the Federal Power Commission (this Commission's predecessor) to the Department of Energy (DOE).[12] As discussed further below, DOE has retained the authority to exercise section 3 jurisdiction to approve or deny applications to import or export gas and delegated back to the Commission jurisdiction under section 3 over the siting, construction, and operation of gas import and export facilities.[13]

9. NGA section 1(b) exempts the production, gathering, and local distribution of natural gas from NGA jurisdiction over the transportation of natural gas in interstate commerce. NGA section 1(c) exempts transportation and sales for resale of gas in interstate commerce by so-called "Hinshaw" pipeline companies located entirely within a single state that are subject to regulation by a state commission, and that only transport gas consumed in their states.[14] In addition, an exemption is provided by NGA section

---

company or any rule, regulation, practice or contract affecting jurisdictional services is unjust, unreasonable, or unduly preferential or discriminatory.

[12] DOE Organization Act, 42 U.S.C. § 7151 (2012). Sections 402(C) and (D) of the DOE Act transferred jurisdiction under sections 1, 4, 5, 6, and 7 of the NGA over the transportation and sales for resale of gas in interstate commerce from the Federal Power Commission to the Federal Energy Regulatory Commission.

[13] We note that in addition to DOE, other federal, state, and local agencies will have authority over Shell's facilities and operations. For example, pipeline systems that transport natural gas, regasification and liquefaction facilities, and the transportation of LNG by trucks and railcar are subject to the U.S. Department of Transportation's (DOT) regulations and requirements addressing the transportation and storage of hazardous materials. DOT's regulations are set forth in Title 49 of the U.S. Code of Federal Regulations. DOT's Office of Hazardous Materials Safety develops and coordinates implementation of hazardous materials regulations with DOT's various operating administrations, including the Office of Pipeline Safety, Federal Highway Administration, and Federal Railroad Administration. Further, the waterborne vessels that transport the LNG sold by Shell in the Great Lakes and the Mississippi River will be subject to the U.S. Coast Guard's requirements and restrictions. Finally, the storage and transportation of LNG is subject to regulations and requirements of the U.S. Environmental Protection Agency under its various enabling statutes, including the Clean Water Act, Clean Air Act, and the Hazardous Materials Transportation Act.

[14] 15 U.S.C § 717(c) (2012). Section 1(c) was added to the NGA in 1954. Pub. L. 323, 83rd Cong., 2nd. Sess. (1954). Section 1(c) is referred to as the "Hinshaw amendment" and pipelines exempted by its provisions are referred to as "Hinshaw

(continued...)

1(d) to prevent a person from becoming subject to section 7 requirements solely by reason of transporting and/or selling gas that will be used as vehicular fuel, if that person does not engage in other transactions that are subject to section 7 or if the person is primarily subject to state regulation.

10. In its petition, Shell acknowledges that some of the Canadian and domestic LNG it sells and transports by waterborne vessel, truck, and train will not be used as vehicular fuel. However, Shell argues that the section 1(d) exemption for vehicular fuel will exempt its planned transportation, sales, and facilities from all NGA jurisdiction under both sections 3 and 7 and asserts its position is supported by rules of statutory construction, judicial precedent, and Commission precedent.

11. As discussed below, we do not agree with Shell's arguments to support its position that all of its transportation and sales of LNG and its facilities used for such activities will be exempt from NGA jurisdiction. However, for the reasons explained herein, we find with certain qualifications that Shell will not be subject to the Commission's section 1(b) jurisdiction or need to apply to the Commission for authorization under either NGA section 3 or 7 for any of its planned activities or facilities.[15]

A. NGA Section 1(d)'s Exemption for Vehicular Gas

12. Shell states that most of the imported and domestic LNG that it transports and sells will be sold for use as vehicular fuel and asserts that based on the exemption in NGA section 1(d) for vehicular gas all of its facilities and activities to market LNG will be exempt from NGA jurisdiction.

---

pipelines" because section 1(c)'s exemption was sponsored by Representative Carl Hinshaw of California. *See House of Representatives Hearing Before a Subcommittee of the Committee on Interstate and Foreign Commerce on H.R. 5976* at 19-28, June 29, 1953, 83rd Congress, 1st Sess. (H.R. 5976). Reproduced in *Natural Gas Act, Legislative History* (Roach, F. and Gallagher, W.), Vol. II at 23 (1968).

[15] The Commission issued public notice of Shell's petition informing any interested entities that the Commission was considering the question of whether the activities proposed by Shell would make it subject to the Commission's NGA jurisdiction. Thus, the public was fully aware of the jurisdictional questions under consideration in this proceeding. The Commission's rationale for reaching its jurisdictional determination is not limited by the arguments raised by the filing parties.

13. Section 1(d) of the NGA states:

> The provisions of this Act shall not apply to any person solely by reason of, or with respect to, any sale or transportation of vehicular natural gas if such person is –
>
> (1) not otherwise a natural-gas company; or
>
> (2) subject primarily to regulation by a State commission, whether or not such State commission has, or is exercising, jurisdiction over the sale, sale for resale, or transportation of vehicular natural gas.[16]

14. NGA section 2(10) defines "vehicular natural gas" as "natural gas that is ultimately used as a fuel in a self-propelled vehicle,"[17] which can include gas in a liquid state as LNG or as refrigerated liquid methane (RLM),[18] and gas in vapor state as compressed natural gas (CNG).

15. In 1992, prior to the addition of section 1(d) to the NGA, the Commission issued a final rule[19] that adopted section 152.1(b)[20] of its regulations, providing for the automatic issuance of blanket certificates authorizing Hinshaw pipelines, local distribution companies (LDCs),[21] and otherwise non-jurisdictional entities to make sales for resale of

---

[16] Section 1(d) of the NGA was added by section 404 of the Energy Policy Act of 1992 (EPAct 1992). Public Law 102-486, 106 Stat. 2776 (1992).

[17] The definition of "vehicular natural gas" in section 2(10) of the NGA also was added by section 404 of EPAct 1992.

[18] As cryogenic fluids, LNG contains approximately 95 percent methane and RLM is further refined to approximately 99 percent methane.

[19] *Regulations Governing Vehicular Natural Gas,* Order No. 543, 57 Fed. Reg. 32,890 (1992), FERC Stats. & Regs. ¶ 30,948 (July 16, 1992).

[20] 18 C.F.R. § 152.1(b) (2014).

[21] The NGA does not include a definition of an LDC. However, "local distribution company" is defined in section 2(17) of the Natural Gas Policy Act of 1978 (NGPA), 15 U.S.C. § 3301(21)(6) (2012), as an entity "engaged in the transportation, or local distribution, of natural gas and the sale of natural gas for *ultimate consumption.*" (*Emphasis added.*) The Commission's 1992 final rule added section 152.1(b)(1)(ii) to the

(continued...)

gas that will be used as vehicular fuel. The blanket certificates gave these companies assurance that they might make sales of gas for use as vehicular fuel without jeopardizing their otherwise non-jurisdictional status, even if the gas sold for use as vehicular fuel was not consumed entirely within a single state. Section 152.1(b) of the Commission's regulations became effective August 24, 1992; on October 24, 1992, Congress enacted section 1(d).[22]

16. Because section 1(d) prevents any person that is "not otherwise a natural-gas company" or "subject primarily to regulation by a State commission" from becoming NGA jurisdictional *solely* by reason of "any sale or transportation of vehicular natural gas,"[23] the enactment of section 1(d) eliminated the need for Hinshaw pipelines and LDCs to rely on section 152.1(b)'s automatic blanket certificate authority to transport and make sales for resale of gas that will be used as vehicular fuel. Thus, for example, section 1(d) provided an exemption from NGA jurisdiction over the transportation and sale for resale of natural gas in interstate commerce for LDCs selling and delivering gas through their local distribution pipeline systems to vehicular fueling stations where the gas would be resold, and for LDCs and Hinshaw pipelines selling compressed or

---

Commission's regulations to provide additional assurance to both LDCs and Hinshaw pipelines by codifying the Commission's conclusion, initially reached in *Northern Illinois Gas Company*, 20 FERC ¶ 61,267 (1982), that, for purposes of the NGA's exemptions for local distribution and Hinshaw pipelines, gas should be deemed to be "ultimately consumed" in the state in which it is delivered into a vehicle fuel tank, even if the fuel tank itself is transported to another state before being attached to a vehicle.

[22] The Commission subsequently provided, in section 284.402 of the regulations, for the issuance of blanket marketing certificates to authorize any persons who are not interstate pipelines to make sales for resale at negotiated rates of gas subject to NGA jurisdiction.

[23] *Emphasis added.* While NGA section 2(10) uses the term "self-propelled vehicle," it does not define "vehicle." In its 1992 final rule on vehicular natural gas, the Commission stated that the definition of vehicles "shall be broadly construed to include, among other things, automobiles, trucks, buses, trains, aircraft, boats, non-road farm vehicles, and construction vehicles, or any other self-propelled vehicle." Order No. 543, 57 Fed. Reg. 32890 at 32, 893 FERC Stats. & Regs. ¶ 30,948 at 30,517, 57 Fed. Reg. 32,890, at 32,893. Shell notes that its liquefaction facilities in Canada will be capable of producing 480,000 gallons of LNG, enough to fuel twenty-five 1,000-foot-long freighters on the Great Lakes or several thousand heavy-duty trucks. Consistent with the foregoing description, we confirm that both the freighters and trucks are "vehicles" for purposes of section 1(d).

liquefied gas that would be used as vehicular fuel but not consumed in their own states and which might actually leave their states before being injected in vehicular engines.

17. Shell maintains that "where there are explicit exemptions stated in the statute related to the use of the LNG," such as section 1(d)'s exemption for vehicular gas, then separate sections of the statute "which might otherwise be interpreted to confer jurisdiction over the LNG" should not apply. Shell therefore argues that section 1(d)'s exemption for vehicular gas also will exempt its facilities, importation, sales, and transportation of LNG for other end uses from *all* NGA jurisdiction.

18. Shell asserts that Commission precedent supports its position, citing *Pivotal LNG, Inc.*,[24] in which its asserts the Commission's Director of the Office of Energy Projects (OEP) interpreted section 1(d)'s exemption for vehicular gas to include LNG transported by non-pipeline modes of transportation for end uses other than vehicular fuel. Shell also cites the Commission's order in *The Gas Company, LLC*,[25] in which Shell asserts the Commission found that facilities that would be used by The Gas Company in Hawaii to receive domestic LNG supplies from the continental United States would not be subject to section 3 jurisdiction as LNG terminal facilities because The Gas Company is an LDC whose local distribution activities are NGA exempt under section 1(b).[26]

19. Given that section 1(d) operates to prevent a person from becoming a "natural-gas company," a term that only has relevance for purposes of the NGA with respect to the transportation and sale of gas in interstate commerce, we conclude that section 1(d)'s exemption is limited to the transportation and sales of vehicular gas in interstate commerce by (1) a person that does not engage in any other activities in interstate commerce that cause it to be a jurisdictional "natural-gas company" under sections 1(b) and 7, and (2) an LDC or Hinshaw pipeline company which, but for section 1(d)'s exemption, would become a jurisdictional "natural-gas company" and need section 7 certificate authority to engage in transportation and sales activities involving vehicular gas that do not qualify as exempt local distribution or Hinshaw activities. However, while NGA section 2(b)'s definition of natural-gas company and section 7's certification requirements are limited to persons that transport or sell gas for resale in interstate commerce, section 3 is not limited to a person that is also a natural gas company.[27]

---

[24] 137 FERC ¶ 62,108 (2011) (*Pivotal*).

[25] 142 FERC ¶ 61,036 (2013) (*The Gas Company*).

[26] Shell's *Petition* at 19.

[27] NGA section 3 applies more broadly, stating that "no person" shall import or export gas without prior authorization from the Commission.

Therefore, a person becomes subject to section 3 jurisdiction by engaging in import/export activities, regardless of whether that person meets the section 2(6) definition of a natural gas company.[28] Accordingly, the section 1(d) exemption for vehicular gas is not relevant in determining section 3 jurisdiction over the importation and exportation of gas, and section 1(d) does not provide any exemption from section 3 jurisdiction for gas that will be used as vehicular fuel. Further, since section 1(d) only prevents a person from becoming a natural gas company *solely* by reason of any sale or transportation of vehicular gas, it does not prevent a person from becoming a natural gas company by reason of jurisdictional sales and transportation of gas that will not be used as vehicular fuel, which Shell has stated will be the case with some of the volumes it intends to transport.

20. The precedent cited by Shell is not inconsistent with our finding that section 1(d)'s exemption for vehicular gas does not exempt a person's import/export facilities and importation of LNG from section 3 jurisdiction or our finding that section 1(d)'s exemption does not shield a person's transportation and sales for resale of non-vehicular gas in interstate commerce from section 1(b) jurisdiction over such activities or section 7 certification requirements. While the Director found in *Pivotal* that the applicant did not need Commission authorization for its liquefaction and truck loading facilities, or to transport LNG by truck to destinations where the LNG would be consumed as vehicular fuel or as for fuel for industrial equipment, that finding was not based on an expansion of section 1(d)'s exemption for vehicular gas to cover other, non-vehicular end uses. As

---

[28] Similarly, while section 1(b) exempts LDCs' local distribution activities in interstate commerce and facilities used for such activities from section 7 certification requirements, and section 1(c) exempts Hinshaw pipelines' qualifying activities and facilities from section 7 certification requirements, these companies are nonetheless subject to the Commission's section 3 jurisdiction over the siting, construction, and operation of import/export facilities. *See, e.g., Michigan Consolidated Gas Company Utility Divison*, 48 FERC ¶ 61,300, at 61,959 (1989), where the Commission issued section 3 authorization for a Hinshaw pipeline that also provided local distribution service to construct and operate border-crossing facilities, and *San Diego Gas & Electric Company*, 64 FERC ¶ 61,221 (1993), where similar authorization was issued to another LDC/Hinshaw pipeline. The same is true with respect to intrastate pipelines that do not transport or sell for resale any gas in interstate commerce and therefore are not encompassed by section 1(b) jurisdiction over such activities in interstate commerce or subject to section 7 certification requirements. *See North Country Gas Pipeline Corporation*, 53 FERC ¶ 61,321, at 62,178 (1990) (issuing section 3 authorization and a Presidential Permit for an intrastate pipeline to construct border-crossing facilities to transport gas from Canada for consumption in New York).

explained below in our discussion of the potential applicability of section 7 jurisdiction to Shell's planned activities and facilities, the jurisdictional determination in *Pivotal* was based on long-standing Commission precedent supporting a finding that Pivotal's liquefaction operations and facilities were not subject to the Commission's jurisdiction over the transportation of gas in interstate commerce because the purpose of liquefying the gas was to transform it into what is, in effect, an end product for sale and delivery in its liquid state to an end user, with no intent for any of the LNG to be reintroduced into a pipeline.[29]

21. Further, Shell is incorrect that the Commission dismissed the application in *The Gas Company* for authorization under section 3 of pier facilities as jurisdictional LNG terminal facilities because the applicant's facilities downstream of the pier are exempt from section 7 jurisdiction both as local distribution and Hinshaw pipeline facilities.[30] Rather, the Commission disclaimed jurisdiction over the pier facilities because "[w]e do not believe these pier facilities constitute 'natural gas facilities' as that term is used in the section 2(11) definition [of LNG terminal]."[31]

22. Shell cites *Texas Gas Pipeline Association and Railroad Commission of Texas v. FERC* (*Texas Gas*),[32] in which the court ruled that Commission could not rely on newly enacted authority in section 23 of the NGA to require *intrastate* pipelines to report information regarding their activities to facilitate price transparency in the *interstate* gas market. Shell contends *Texas Gas* establishes that an entity exempted by one section of the NGA is exempt from all other sections of the NGA. Based on its reading of *Texas Gas*, Shell asserts that because section 1(d) provides an exemption for the transportation and sale of vehicular gas by a person that is not otherwise a natural gas company, section 1(d) will operate to exempt all of its activities and facilities from all NGA jurisdiction.[33]

---

[29] *See Air Products and Chemicals, Inc.*, 58 FERC ¶ 61,199, at 61,619 (1992) (*Air Products*).

[30] Shell's *Petition* at 19.

[31] *The Gas Company*, 142 FERC ¶ 61,036 at P 14.

[32] 661 F.3d 258 (5th Cir. 2011).

[33] Shell contends that section 1(d) exempts its transportation and sale of LNG that will be used as vehicular fuel from section 7 jurisdiction and, therefore, that other provisions of the NGA "which might otherwise be interpreted to confer jurisdiction over the LNG 'import' or LNG 'terminal facilities' (*e.g.*, an on-shore storage terminal that receives and stores the LNG), cannot be interpreted to establish jurisdiction where there are explicit exemptions stated in the statute." Shell's *Petition* at 16.

We do not agree that *Texas Gas* supports Shell's position that section 1(d)'s explicit exemption for the transportation and sale of vehicular gas will operate to exempt Shell's other activities and facilities from jurisdiction under all provisions of the NGA.

23. In *Texas Gas,* the court addressed the extent of the Commission's jurisdiction under section 23 of the NGA, which was added by the Energy Policy Act of 2005 (EPAct 2005),[34] and authorized the Commission to obtain information from "any market participant" and disseminate such information in order to facilitate price transparency in the interstate market. The Commission attempted to rely on this authority to require that "major" non-interstate pipelines, which the Commission defined to include intrastate pipelines that transport more than 50 MMbtu of gas per year, post their flows and information regarding receipt and delivery points. The *Texas Gas* court found that in the section 23 context, the market referred to by the term "any market participant" is limited to the interstate market. The court therefore held that the Commission's reliance on section 23 to require reporting by "wholly" intrastate pipelines[35] impermissibly expanded the intended coverage of section 23. We believe our findings here are consistent with the court's approach in *Texas Gas*, since we acknowledge that section 1(d) has applicability only in limited situations, i.e., when gas that will be used as vehicular fuel is being transported or sold in interstate commerce.

B. Shell's Transportation, Sales, and Facilities Will Not Be Jurisdictional under NGA Section 7 for Reasons Separate and Apart from the Section 1(d) Exemption

1. NGA Section 7 jurisdiction over transportation and facilities only applies to transportation by pipeline and pipeline facilities

24. In 1970, prompted by an increase in the use of LNG as a means to store gas for peak demand days and in anticipation of an increase in LNG imports, the Commission issued a Notice of Proposed Rulemaking (NOPR) that reflected the assumption that NGA jurisdiction extended to the transportation of LNG by surface vehicle and waterborne vessel.[36] However, in the NOPR the Commission stated its conclusion that its regulation

---

[34] Pub. L. No. 109-58, 119 Stat. 594 (2005).

[35] 661 F.3d 258 at 263.

[36] *See Exemption of Certain Transport and/or Sales of LNG from the Requirements of Section 7(c) of the NGA, Notice of Proposed Rulemaking*, 35 Fed. Reg. 3,076 (Feb. 17, 1970). At the time the NOPR was issued, the Commission had long-standing precedent for asserting section 7 jurisdiction over interstate pipelines'

(continued...)

of the transportation of LNG by truck, barge, or train "would generally be duplicative of other Federal regulatory agencies such as the Interstate Commerce Commission and the Department of Transportation."[37] Therefore, the Commission proposed to amend its regulations to provide for an exemption from certificate requirements for the transportation of LNG by motor carrier, barge, or rail in interstate commerce and for a person's sales for resale in interstate commerce of LNG to be transported by such non-pipeline means if its total sales of LNG would not exceed 65,000 gallons in a calendar year.[38]

25. After considering comments on the NOPR, the Commission terminated the rulemaking without issuance of a final rule, concluding that its jurisdiction over interstate transportation only applies to the transportation of gas, including LNG, by pipeline.[39] The Commission reached that decision based on the fact that the NGA was a "remedial statute" enacted to eliminate abuses by interstate pipelines whose rates for interstate

---

liquefaction, storage, and regasification of LNG, their facilities used for such purposes, and rates and charges in connection therewith. *See, e.g., Transcontinental Gas Pipe Line Corporation (Transco)*, 30 FPC 38 (1963) (finding that Transco's proposed LNG facilities to store gas for its sales customers during off-peak periods would be used in the transportation of natural gas in interstate commerce subject to the jurisdiction of the Commission and section 7(c) of the NGA).

[37] 35 Fed. Reg. 3,076.

[38] *Id.*

[39] *Order Terminating Proposed Rulemaking Proceeding,* 49 FPC 1078, 1081 (1973). Subsequently, the Commission has declined on several occasions to exercise jurisdiction over the movement of LNG by non-pipeline modes of transportation. *See Marathon Oil Company (Marathon)*, 53 FPC 2164, at 2175 (1975), where in response to contentions that it should find that section 7 jurisdiction would apply to the tankers that would transport LNG from Alaska to Oregon because "pipeline" is only mentioned once in the NGA (in section 7(h)), the Commission pointed out that "Section 7 is phrased in terms of 'extend,' 'physical connection,' 'abandon,' and 'construct,' all of which relate to stationary, not movable, facilities." *See also Southern LNG Inc.*, 131 FERC ¶ 61,155 (2010) (*Southern LNG*) and *New England LNG Co., Inc.*, 49 FPC 1460 (1973) (transportation of LNG by truck); *Distrigas of Massachusetts Corporation*, 55 FPC 3121 (1976) (transportation of LNG by barge and truck); and *Wisconsin Gas Company*, 53 FPC 2198 (1975) (transportation of LNG by truck). Although the cited decisions address gas in a liquid state, the Commission's reasoning is equally applicable to gas vapor, e.g., CNG, being moved by a non-pipeline mode of transportation.

service were beyond state commissions' control,[40] and because the provisions of section 7 relating to transportation only contemplate transportation by pipeline.[41] In view of the NGA's legislative history and the fact that Congress recognized that pipelines were the only method of transporting gas in 1938 when the NGA was enacted, the Commission concluded that "Congress was addressing itself to regulation of pipelines in order to eliminate demonstrated abuses rather than to the regulation of all modes of transportation of gas in interstate commerce," and that "Congress never foresaw the transportation of natural gas (liquefied natural gas) by any means other than pipeline."[42] Thus, the Commission stated that "legislative action is necessary if Congress wishes to regulate this type of activity."[43]

26. As described in Shell's petition, LNG supplies from Canada will have been transported in vapor form by pipeline to Shell's Sarnia Manufacturing Centre in Ontario, but the pipeline transportation will end at that liquefaction facility in Canada. Further, while the liquefaction facility that Shell may construct in Geismar, Louisiana, presumably will receive gas supplies via a domestic pipeline, all gas liquefied at that

---

[40] 49 FPC 1078, 1079.

[41] *Id.* at 1080. The Commission cited section 7(a), which provides that the Commission may direct a natural gas company to "extend" its transportation facilities and to establish "physical connection" of its transportation facilities to the facilities of others; section 7(b), which requires a natural gas company to seek the permission and approval of the Commission in order to "abandon" any portion of its facilities; section 7(c), which provides that no person may undertake, without certificate authority, the "construction" or "extension" of facilities to transport or sell gas for resale in interstate commerce; and section 7(h), which specifically gives to holders of certificates granted by the Commission authorizing construction the power of eminent domain in federal district courts to obtain the necessary property rights "to construct, operate, and maintain a pipe line or pipe lines for the transportation of natural gas, and the necessary land or other property, in addition to right-of-way, for the location of compressor stations, pressure apparatus, or other stations or equipment necessary to the proper operations of such pipe line or pipe lines."

[42] *Id.* at 1079. The Commission also acknowledged that, while the Interstate Commerce Commission (ICC) had jurisdiction to regulate railroads, oil pipelines, motor vehicles and inland, coastal, and intercostal shipping, the transportation of LNG by private carrier and as liquid bulk cargo in tanker vessels was exempt from the ICC's jurisdiction. *Id.* at 1080.

[43] *Id.* at 1081.

facility and at Shell's liquefaction facility in Canada will leave and be delivered by truck, train, or ship to vehicular fueling stations, to end users, or to intermediate storage facilities, from which the LNG will be delivered to vehicular fueling stations or to end users. As described in Shell's petition, no gas will enter another pipeline system after leaving Shell's facilities. While Shell acknowledges that minimal amounts of unavoidable boil-off and tail gas will be produced by its liquefaction operations in Geismar, the boil-off and tail gas will be moved by short segments of pipe to large industrial customers adjacent to the liquefaction site. Shell states that gas leaving the Geismar liquefaction facility "will not be introduced into a pipeline system for further transportation."[44]

27. While we have rejected Shell's argument that *Pivotal* implicitly extended the section 1(d) exemption for vehicular fuel to cover LNG used as fuel for compressors and other industrial equipment,[45] *Pivotal* does support a finding that Shell's activities and facilities will not be subject to NGA jurisdiction over the transportation and sale for resale of natural gas in interstate commerce. As discussed above, the Director of OEP dismissed an application by Pivotal for a certificate under section 7 to authorize its operation of liquefaction and storage facilities that had previously functioned as non-jurisdictional peak-shaving facilities for an adjacent municipal gas system. Pivotal planned to purchase gas from the municipal utility and use its facilities to liquefy the gas and transfer it into containers to be loaded onto trucks for delivery to vehicle fueling depots and other locations to be used to fuel stationary equipment such as compressors. Pivotal represented that, except for unavoidable boil-off or tail gas vapor that would be delivered back to the municipal utility: (1) all gas leaving the facility would do so by truck as LNG; (2) all LNG leaving the facility would be used as vehicular or other end-use fuel; and (3) no LNG leaving the facility would be introduced, in either liquid or vapor form, back into a pipeline system for further transportation. Based on these representations, the Director found that Pivotal's transportation of LNG and facilities would not be subject to the Commission's section 7 jurisdiction.[46]

---

[44] Shell's *Petition* at 2.

[45] *Id.* at 15.

[46] The Director's order also noted that Pivotal represented that no gas leaving the LNG facility would be exported, so any jurisdictional implications of gas exports were not addressed. The Director's order did not address whether any of Pivotal's sales for resale in interstate commerce could be NGA jurisdictional and subject to section 7 certification requirements. However, as discussed below, as a result of statutory changes, jurisdiction under section 7 over sales of gas, including LNG, in interstate commerce is limited to sales for resale of domestic gas by inter- or intrastate pipelines, LDCs, and

(continued...)

28. *Pivotal* reflects the rationale explained in *Air Products*, where the issue was whether Air Products needed a section 7 certificate to authorize its liquefaction of gas to produce RLM for delivery directly into railroad engines and to the operators of truck fleets and municipal transit systems with RLM-burning capability. The Commission found that there are situations where the liquefaction of gas is not subject to section 7 jurisdiction over the transportation of gas because the purpose of liquefying the gas is to transform it into what is, in effect, an end product, with no intent for any of that LNG to be regasified and introduced into a pipeline.[47] As explained in *Air Products,* the concern when presented with independent LNG facilities like those planned by Shell is whether a circumvention of NGA jurisdiction over the interstate transportation of gas by pipeline

---

their affiliates, and the sales by such entities of gas that enters interstate commerce after being imported from non-free trade countries. Further, if Pivotal has affiliations that prevent its sales for resale from qualifying as NGA-exempt first sales, it would be able rely on the automatic blanket certificate authority provided by section 284.402 of the Commission's regulations to sell its LNG at negotiated rates and would not need to apply for case-specific certificate authority under section 7 to make such sales.[47] In *Air Products*, the Commission stated that in *Marathon* it had found that an LNG plant in Kenai, Alaska, would need section 7 certificate authorization to liquefy gas that would be transported by cryogenic tanker to Oregon because the liquefaction service was necessary in order for the gas to reach the pipeline system of the Hinshaw pipeline purchasing the gas for its local distribution system in Oregon, and the liquefaction service in Alaska therefore would be "instrumental in facilitating the interstate transportation of the gas" by pipeline. *Air Products*, 58 FERC ¶ 61,618. Shell represents that all its LNG will sold as a final product, moved by non-pipeline modes of transport, and delivered to end users in its liquid state for use as fuel for vehicles and industrial equipment.

[47] In *Air Products*, the Commission stated that in *Marathon* it had found that an LNG plant in Kenai, Alaska, would need section 7 certificate authorization to liquefy gas that would be transported by cryogenic tanker to Oregon because the liquefaction service was necessary in order for the gas to reach the pipeline system of the Hinshaw pipeline purchasing the gas for its local distribution system in Oregon, and the liquefaction service in Alaska therefore would be "instrumental in facilitating the interstate transportation of the gas" by pipeline. *Air Products*, 58 FERC ¶ 61,618. Shell represents that all its LNG will sold as a final product, moved by non-pipeline modes of transport, and delivered to end users in its liquid state for use as fuel for vehicles and industrial equipment.

could result "merely because liquefaction of the gas was interposed on what would otherwise have been a continuous flow of natural gas in an *interstate* pipeline system."[48]

29. Thus, even when gas is delivered to a liquefaction facility by a jurisdictional interstate pipeline, when the purpose of liquefying the gas is to transform it into an "end product"[49] to be delivered by a non-pipeline mode of transportation to end users, the Commission has viewed the liquefaction facility as the ultimate destination for the pipeline transportation of the gas.[50] This fits Shell's description of its anticipated activities, whereby it will produce and sell a "consumer product" – LNG – that "will not be introduced into a pipeline system for further transportation."[51]

---

[48] *Id.* at 61,619 *(emphasis added)*. In *Air Products*, the Commission explained that whereas the Alaskan liquefaction plant in *Marathon* was analogous to a jurisdictional compressor station because it facilitated the interstate transportation of gas by converting it to a form that could be delivered by cryogenic tanker to Oregon for revaporization and injection into a Hinshaw pipeline's system, 58 FERC ¶ 61,199 at 61,618, Air Products' RLM facility more readily lent itself to the jurisdictional analysis that the Commission applies in determining whether a processing plant is jurisdictional, which turns on whether the processing at the plant is necessary to make the gas fit for safe and efficient transportation by pipeline. Air Products' processing (i.e., liquefaction) of gas was for economic reasons (i.e., to sell the RLM as final fuel product), rather than "*essential* to make the gas to make the gas fit for pipeline transportation." *Id.* at 61,619, *quoting Texas Eastern Transmission Corp.*, 43 FERC ¶ 61,044, at 61,129 (1988).

[49] *Id.* In addition to its use as fuel for combustion engines, we note that LNG can also be sold and delivered in its liquid state as a product for use as a feedstock for manufacturing end products such as plastics and commercial organic chemicals.

[50] *Id.* In *Air Products*, the Commission found that jurisdictional gas transportation by pipeline had reached its "ultimate destination" at Air Products' liquefaction plant where the gas would be used to produce RLM for delivery directly into railroad engines or to the operators of truck fleets or municipal transit systems with RLM-burning capability. *Id.* at 61,618-19.

[51] Shell's *Petition* at 2. With one possible exception discussed below, none of Shell's LNG will be transported by an NGA-jurisdictional pipeline or any other pipeline system in the United States before or after being sold and transported by Shell. In *Air Products*, the Commission described the instances where it had found that the operator of an independent liquefaction facility was engaging in jurisdiction transportation of gas, and stated that "[t]he paradigm which characterizes these cases is as follows: (1) the natural gas is transported by *interstate* pipeline to a liquefaction facility, (2) the gas is

(continued...)

30. In view of the above considerations, we find that none of Shell's described facilities, including its Geismar, Louisiana, facility, nor any of its transportation of LNG will be subject to section 7 jurisdiction over the transportation of gas in interstate commerce. As discussed below, we further find, with a possible exception, that Shell's sales of LNG for resale in interstate commerce also will be exempt from section 7 jurisdiction.

2. NGA Section 7 jurisdiction over sales for resale only applies to gas transported at some point by interstate pipeline.

31. As discussed by the United States Supreme Court in *FPC v. Hope Natural Gas Co.*,[52] the "primary aim" of the NGA was to "protect consumers against exploitation" by interstate pipeline companies which, at the time, were also the merchants of the gas they

---

liquefied, and then either (3) stored at or near the LNG plant for later revaporization to meet market demand, or (4) transported by truck or tanker to a destination where the LNG is revaporized and injected into a pipeline for either interstate transportation or local distribution." *Air Products*, 58 FERC ¶ at 61,618 (*emphasis added*, footnote omitted). However, in *Air Products'* cited cases where the Commission asserted section 7 jurisdiction over the use of facilities to liquefy gas for transportation by waterborne vessel or truck to an LDC's non-jurisdictional pipeline system (id. at n. 13), additional considerations were involved. In *Marathon*, 53 FPC 2164, 2173, where the existing Kenai LNG plant in Alaska needed section 7 certificate authority to liquefy and load LNG onto tankers for transportation to a Hinshaw pipeline system in Oregon, the Commission was already exercising section 3 jurisdiction over exports of LNG from the plant; the Commission had already found that both pipelines transporting gas to the LNG plant would need section 7 certificate authority as jurisdictional interstate transmission facilities; the LNG plant was leased to Marathon, which also was an owner of one of the upstream pipelines; the LNG plant was operated by Phillips Petroleum Company (Phillips), which was an owner of the other upstream pipeline; and Marathon and Phillips would be using the LNG plant to make their bundled sales of gas to the Hinshaw pipeline company in Oregon. In *Wisconsin Gas Company,* 53 FPC 2198 (1975), the Commission asserted section 7 jurisdiction over an LDC's liquefaction facility because it was being used to load trucks with LNG for delivery to an affiliated LDC to implement an exchange arrangement involving the displacement of gas moving on an interstate pipeline and a jurisdictional sale for resale. Similarly, in *Natural Gas Company*, 55 FPC 919 (1976), an LDC purchasing gas from an interstate pipeline had the interstate pipeline deliver its gas to another LDC that liquefied the gas and redelivered it as LNG by truck.

[52] 320 U.S. 591, 610 (1944) (*Hope*).

transported. Due to the lack of regulatory oversight over interstate pipelines, state commissions were being "thwarted in local regulation" because it was difficult or impossible for them to ascertain interstate pipelines' costs of purchasing and delivering gas.[53] Further, most of the pipeline mileage in the country, together with an increasing percentage of available gas supplies, had been acquired by a handful of companies.[54] Consequently, "State commissions, independent producers, and communities having or seeking the service [by interstate pipelines] were growing quite helpless against these combinations."[55] The Court found that "[t]hese were the types of problems with which those participating in the [Congressional] hearings were pre-occupied,"[56] and that it was "those specific evils"[57] which Congress had addressed in enacting the NGA to give the Federal Power Commission broad powers to insure that interstate pipelines' bundled transportation and sales rates were just and reasonable and to require them to extend or improve their facilities in order to sell gas to local distribution companies.[58]

32. Further, the Supreme Court's findings in *Phillips Petroleum Co. v. Federal Power Commission* (*Phillips*)[59] indicate that section 7 jurisdiction over sales of gas in interstate commerce only extends to sales of gas which is transported at some point by an interstate pipeline. In *Phillips*, the Court found that the legislative history of the NGA indicated Congressional intent to give the Commission jurisdiction over the rates of wholesales of natural gas in interstate commerce, "whether by a pipeline company or not and whether occurring before, during, or after transmission *by an interstate pipeline company,*"[60] and the Court was "satisfied that Congress sought to regulate wholesales of natural gas

---

[53] *Id.* at 610 (citing H.R. Rep. No. 709, 75th Cong., 1st Sess., p. 2).

[54] *Id.* (citing S.Doc. 92, Pt. 84-A, ch. XII, Final Report, Federal Trade Commission to the Senate pursuant to S.Res.No. 83, 70th Cong., 1st Sess).

[55] *Id.* (citing S.Doc. 92, Pt. 84-A, chs. XII, XIII, *op. cit., supra*, note 17).

[56] *Id.* (citing Hearings on H.R. 11662, Subcommittee of House Committee on Interstate & Foreign Commerce, 74th Cong., 2d Sess.; Hearings on H.R. 4008, House Committee on Interstate & Foreign Commerce, 75th Cong., 1st Sess).

[57] *Id.* at 610.

[58] *Id.* at 611.

[59] 74 S.Ct. 794 (1954) and 347 U.S. 672 (1954) (*Phillips*).

[60] *Id.* at 682 (*emphasis added*).

occurring *at both ends of the interstate transmission systems*."[61] The Court's decision also concluded that exempting producers that sold interstate pipelines their system supplies could defeat the purpose of the NGA because "[u]nreasonable charges exacted at this stage of the interstate movement become perpetuated" because unreasonable prices by producers for gas would result in interstate pipelines' gas prices being unreasonable and state commissions would have limited ability, as a practical matter, to not allow the full pass-through of such charges by LDCs to consumers.[62]

33. Thus, the Court's decisions in both *Hope* and *Phillips* turn on findings based on a conclusion that the NGA's purpose is to ensure that consumers are not charged unreasonable prices for gas supplies that would be delivered by interstate pipelines, which at the time the NGA was enacted were the only feasible means of moving significant volumes of gas in interstate commerce. Therefore, we do not believe that section 7 jurisdiction over sales for resale in interstate commerce contemplated or was intended to apply to sales of gas that never enters interstate pipeline facilities subject to section 7 jurisdiction over the transportation of gas in interstate commerce. Based on Shell's representations, none of its imported LNG supplies will be transported by any pipeline in the United States before or after leaving Shell's facilities. Further, all of the domestic gas that would be liquefied at the potential Geismar facility will be transported from that facility by waterborne vessels, trucks, and/or trains to vehicular fueling stations and end users.

34. While Shell states that "[i]n both of the Sarnia and Geismar projects, there would be no jurisdictional interstate transportation into or out of the LNG receiving facility,"[63]

---

[61] *Id.* at 684 (*emphasis added*).

[62] *Id. at* 680.

[63] Shell's *Petition* at 20. In view of our finding above that section 7 jurisdiction over sales for resale in interstate commerce does not apply to sales of gas that never enters interstate pipeline facilities, Shell's sales of gas liquefied at Geismar would not become subject to section 7 jurisdiction if local production is delivered to the liquefaction facility by an NGA-exempt gathering line, since Shell represents that no gas will enter interstate pipeline facilities after leaving any of its facilities. For the same reason, section 7 jurisdiction over sales would not attach to any of Shell's sales of LNG leaving Geismar if the source of the gas is Louisiana production received from an intrastate pipeline that has not commingled the Louisiana production with interstate supplies received from an upstream pipeline. Note that if any of the gas the intrastate pipeline transports to Geismar is from outside Louisiana, that intrastate pipeline can only avoid becoming NGA-jurisdictional by providing such service under section 311 of the NGPA.

this statement only makes it clear that the Geismar liquefaction facility will not have a direct interconnection with an interstate pipeline, not that none of the gas will have been transported at some point upstream by an interstate pipeline. So long as all of the gas leaving Shell's liquefaction facility by waterborne vessel, truck or train is delivered in liquid state to end users and none of the gas is reintroduced into a pipeline, upstream transportation by an interstate pipeline would not affect our finding that Shell's operation of its Geismar liquefaction facility will not be subject to section 7 jurisdiction over transportation and facilities. However, upstream transportation by an interstate pipeline could affect whether Shell's sales for resale of LNG from its Geismar facility are potentially jurisdictional sales under section 7.

35. All of the gas liquefied at Geismar will be from domestic sources. As the result of post-NGA legislation, the only sales for resale of domestic gas still subject to section 1(b) jurisdiction over sales for resale in interstate commerce, section 4 rate conditions, and section 7 certification requirements are sales for resale that do *not* qualify as NGA-exempt "first sales" as defined in section 2(21) of the NGPA. Under the general rule of that definition, first sales of domestic gas include any sale *to* an interstate pipeline, intrastate pipeline, LDC or retail customer, or any sale in the chain of transactions *prior* to a sale to one of those entities. Sales *by* interstate pipelines, intrastate pipelines, LDCs, and their affiliates only qualify as first sales if the gas was produced by one of those entities or one of their affiliates. However, once gas has been sold to and been in the possession of a pipeline, LDC, or retail customer, the chain of first sales is broken, and no subsequent sale of the gas can qualify under the general rule as a first sale, even if the seller or one of its affiliates produced the gas.[64]

---

[64] *See In the Matter of Amendments to Blanket Sales Certificates*, 107 FERC ¶ 61,174, at PP 19 – 28 (2004) (order denying rehearing of Final Rule, Order No. 644). EPAct 1992 added section 3(b) of the NGA to provide that the importation of gas vapor from countries with free trade agreements, such as Canada and Mexico, and the importation of LNG also have first sale status.

While the decontrol of wellhead gas prices was begun by the NGPA, decontrol was completed by the Natural Gas Wellhead Decontrol Act of 1989, Pub. L. No. 101-60; 103 Stat. 157 (1989), by amending section 601(a)(1)(A) of the NGPA to provide:

> For purposes of Section 1(b) of the Natural Gas Act, the provisions of the Natural Gas Act and the jurisdiction of the Commission under such Act shall not apply to any natural gas solely by reason of any *first sale* of such natural gas. (*Emphasis added.*)

36. Since Shell's petition indicates that all of its sales of domestic gas liquefied in Geismar, Louisiana, will be of gas that is its own production, any affiliation Shell may have with a domestic pipeline or LDC will not disqualify its sales as first sales. Further, none of Shell's sales will be disqualified from first-sale status unless the gas has been previously sold to and in the possession of a domestic pipeline, LDC, or retail customer. Thus, for example, if an intrastate pipeline provides transportation service to bring Louisiana production to the Geismar liquefaction facility, but does not own the gas, transportation of the gas by the intrastate pipeline will not prevent Shell's sales of the gas from qualifying as first sales exempt from section 7 certification requirements.[65] In any event, following the legislative decontrol of prices for most gas sales, the Commission determined there was no longer a need to exercise its jurisdiction over sales other than those by interstate pipelines. Therefore, the Commission adopted section 284.402 of its regulations to provide for the automatic issuance of section 7 blanket marketing certificates to authorize any persons who are not interstate pipelines to make sales for resale of gas remaining subject to section 7 jurisdiction and charge negotiated rates.[66] Thus, if any of Shell's sales for resale are subject to section 7 certification requirements, Shell will not need to apply for certificate authority to make the sales as they will be authorized under the automatic blanket certificate provided by section 284.402 of the regulations.

3. Shell's Facilities will not be subject to the Commission's NGA Section 3 Jurisdiction as import facilities

[65] As noted above, section 3(b) of the NGA provides that with respect to the importation of LNG or of gas vapor from countries with free trade agreements, the importation of such will be treated as a "first sale." Based on Shell's representations, none of its imported Canadian LNG or its LNG produced from its own domestic gas production will have been *sold* to and in the possession of any domestic pipeline, LDC, or retail customer prior to being sold by Shell. Although Shell's domestic production will be delivered by pipeline to the planned liquefaction facility in Geismar, Louisiana, Shell does not indicate that the gas will be sold to the pipeline. Thus, all of Shell's sales of its domestic gas production and all its imported Canadian LNG should qualify as first sales exempt from NGA certification and rate requirements.

[66] 18 C.F.R. § 284.402 (2014). Subpart L of Part 284 of the regulations provides that a blanket certificate issued under that section is a certificate of limited jurisdiction which will not subject the certificate holder to any other NGA regulations other than the Subpart L regulations.

37. As discussed above, the DOE Organization Act transferred all NGA section 3 jurisdiction from the Federal Power Commission to DOE in 1977, and the Secretary of Energy delegated siting authority for import and export facilities back to this Commission.[67] Specifically, the Commission has been delegated section 3 authority to: "Approve or disapprove the construction and operation of particular facilities, the site at which such facilities shall be located, and with respect to natural gas that involves the construction of new domestic facilities, the place of entry for imports or exit for exports."[68]

38. The Commission has interpreted and exercised its delegated section 3 authority over import/export facilities similarly to how it has interpreted and exercised its section 7 jurisdiction over facilities used to transport gas in interstate commerce.[69] As discussed above, the Commission has found that its section 7 jurisdiction over gas in interstate commerce is limited to gas transported by pipeline, and consequently has only asserted section 7 jurisdiction over pipeline facilities used to transport gas in interstate commerce and facilities used to store gas, including LNG, that is being transported in interstate commerce by pipeline.[70] All of the liquefaction facilities over which the Commission has exercised section 7 jurisdiction have had pipeline interconnections with the interstate pipeline grid.[71] As discussed above, the Commission has not sought to assert section 7

---

[67] The Commission's current delegated authority over section 3 functions is provided by DOE Delegation Order No. 00-004.00A, which was effective May 16, 2006.

[68] *Id.*, section 1.21A.

[69] Although section 3 relating to the importation and exportation of gas was included in the NGA when it was enacted in 1938, the Commission did not seek to exercise its jurisdiction under section 3 until 1947. *See Border Pipe Line Co. v. FPC*, 71 F.2d 149, at 151 (1948).

[70] While having never found cause to do so, the Commission has cautioned that it could act in the event it determined that the liquefaction and transport by surface vehicle or waterborne vessel of gas in interstate commerce effected a circumvention of its regulation over gas moving on interstate pipelines. *Air Products,* 58 FERC at 61,619.

[71] *See, e.g., Transco*, 30 FPC 38 (1963). The length of pipe operated as part of the LNG storage facility, or that needs to be constructed to interconnect a proposed LNG terminal with the interstate pipeline system, is irrelevant in determining whether the storage facility is jurisdictional under section 7. *See, e.g., Pine Needle LNG Company, LLC*, 75 FERC ¶ 61,121, at 61,405 (1996) (preliminary determination describing proposed LNG storage facility that would include 1.05 miles of pipe to interconnect with Transco's system), and 77 FERC ¶ 61,229 (1996) (order issuing certificate).

jurisdiction over vehicles and vessels that haul natural gas between states. Nor did the Commission seek, even prior to adoption of section 1(d)'s exemption for vehicular gas, to assert section 7 jurisdiction over facilities, such as CNG fueling stations, that receive and deliver gas by truck or other non-pipeline modes of transportation.

39. Similarly, the Commission has only exercised its section 3 authority over the siting of facilities used for imports or exports at the borders with Mexico or Canada when gas is being moved by pipeline.[72] To date, aside from such border-crossing pipelines, the only other facilities for which the Commission has granted section 3 siting, construction, and operating authority have been coastal LNG facilities that are served by ocean-going, bulk-carrier LNG tankers. Each of these facilities has also been connected to pipelines that deliver gas to or take gas away from the terminal.[73]

---

[72] In two separate proceedings, the Commission also granted section 3 authorization for the portion of a pipeline crossing the offshore boundary between the United States and The Bahamas Exclusive Economic Zone to transport gas from a planned LNG terminal in the Bahamas to Florida. Both projects were terminated prior to construction. *See Tractebel Calypso Pipeline, LLC*, 106 FERC ¶ 61,273 (2004); *Calypso U.S. Pipeline, LLC,* 118 FERC ¶ 61,051, *order on reh'g*, 119 FERC ¶ 61,119 (2007), *order vacating certificate,* 137 FERC ¶ 61,098 (2011), and *AES Ocean Express, LLC*, 103 FERC ¶ 61,030, *order amending determination*, 103 FERC ¶ 61,326 (2003), *order issuing permit,* 106 FERC ¶ 61,090 (2004), *order amending permit*, 111 FERC ¶ 61,219 (2005).

[73] With the exception of one export facility in Alaska, all of the existing coastal LNG facilities in the United States and the territory of Puerto Rico were originally authorized for purposes of importing LNG. However, in 2012 the Commission granted authorization under NGA section 3 for Sabine Pass LNG, L.P. to construct and operate facilities to liquefy, store, and export domestic gas. *See Sabine Pass Liquefaction, LLC,* 139 FERC ¶ 61,039 (2012); *see also Cameron LNG, LLC*, 147 FERC ¶ 61,230 (2014). Operators of several other coastal LNG facilities built to import gas have pending applications for section 3 authorization to liquefy and store LNG for export. Except for the take-away pipeline from the Freeport LNG Development, L.P. (Freeport LNG) facility, the pipelines interconnecting with the existing facilities were authorized by the Commission under NGA section 7 to transport gas between the LNG facility and the interstate pipeline grid. Since the Freeport LNG import facility was constructed to serve the intrastate Texas market, and its 9.6-mile-long send-out pipeline interconnecting with the Texas intrastate grid would not be transporting any gas in interstate commerce, the Commission authorized that pipeline under section 3 as part of the LNG import facilities. *Freeport LNG Development, L.P.*, 107 FERC ¶ 61,278, at ordering para. (A) (2004);

(continued...)

40. To date, the Commission has not authorized any LNG facilities under either section 7 or section 3 that do not have pipelines connecting the facility with either the interstate or an intrastate grid.[74] While a number of existing LNG facilities, including facilities regulated under NGA section 3 and facilities regulated under NGA section 7, have received authorization to deliver LNG into trucks for transportation away from the facilities,[75] the Commission did not assert jurisdiction over the trucking. As discussed above, the Commission terminated a rulemaking proceeding in 1973 regarding the transportation of LNG by non-pipeline modes of transportation based on the NGA's legislative history which, as discussed by the Supreme Court in *Hope* and *Phillips,* indicates that Congress recognized pipelines as the only method of transporting gas in 1938 when it enacted the NGA, that Congress did not then foresee the transportation of gas by means other than pipeline, and that Congressional intent in the NGA was to regulate pipelines, not all modes of transporting gas in interstate commerce.[76] The Commission's 1973 order terminating the proposed rulemaking proceeding and the *Hope* and *Phillips* decisions addressed jurisdiction over the facilities used for the transportation of gas in interstate commerce under section 7, and we believe it is appropriate to apply the same reasoning with respect to the facilities used for the importation and exportation of gas under section 3.

41. Shell's imported Canadian LNG will enter the United States via waterborne vessel, truck, and/or train. None of the imported gas will enter the United States by pipeline. Further, while Shell contemplates an intermediate docking and storage facility near Detour, Michigan, and possibly similar facilities at other locations on the Great Lakes, to transfer the imported LNG directly from one moored ship to another ship or to transfer Canadian LNG from ship to shore for intermediate storage and subsequent transfer to ships, trucks, or trains, none of the docking or intermediate storage facilities

---

Freeport LNG's section 3 authorization was recently modified in 148 FERC ¶ 61,076 (2014).

[74] As is discussed below, The Gas Company of Hawaii did file an application for section 3 authorization for pier facilities that it planned to use to receive containers of domestic LNG. However, that application was dismissed by the Commission.

[75] *See, e.g., Distrigas of Massachusetts LLC*, 94 FERC ¶ 61,008, at 61,014 (2001), and *Southern LNG*, 131 FERC ¶ 61,155 at P 10. The Commission views an LNG facilities' truck-loading facilities as part of the import/export facility and the delivery of LNG to a tanker truck as a terminalling service. *Id., Southern LNG,* 131 FERC ¶ 61,155 at P 11.

[76] *See* note 37.

will be connected to pipeline facilities connected to the interstate or an intrastate grid. As discussed above, Shell's only facility that will have a pipeline interconnection will be its planned liquefaction facility in Geismar, Louisiana, which will liquefy domestic gas for loading onto waterborne vessels at Shell's dock at its Geismar chemical plant and onto trucks and trains.

42. Since Shell will not use pipeline facilities to import Canadian LNG, and none of the facilities that it will use to import Canadian LNG will be connected to a pipeline, prior to enactment of EPAct 2005 we would not have found it necessary to consider whether any of the facilities receiving the LNG imports would be subject to our jurisdiction as an LNG import facility. However, EPAct 2005 amended the NGA to add section 2(11) to define the term "LNG Terminal." As defined in section 2(11) of the NGA:

> "LNG Terminal" includes all natural gas facilities located onshore or in State waters that are used to receive, unload, load, store, transport, gasify, liquefy, or process natural gas that is imported to the United States from a foreign country, exported to a foreign country from the United States, or transported in interstate commerce by waterborne vessel, but does not include –
>
> (A) waterborne vessels used to deliver natural gas to or from any such facilities; or
>
> (B) any pipeline or storage facility subject to the jurisdiction of the Commission under section 7.

In addition, EPAct 2005 added section 3(e)(1) to provide that "[t]he Commission shall have the exclusive authority to approve or deny an application for the siting, construction, expansion, or operation of an LNG terminal."[77] Thus, we must consider the ramifications of the addition of section 2(11) on the scope of the Commission's jurisdiction.

---

[77] EPAct 2005 also established numerous requirements, set forth in NGA sections 3(e) and 3(A), applicable to the processing of applications for authorization to construct/operate LNG terminals. These conditions limit the Commission's ability to condition approval of a proposed LNG terminal on the applicant filing rates or agreeing to operate the LNG terminal on an open-access basis, as well as requirements to ensure that the decision-making process takes into account the views and interests of the state where the LNG terminal would be located. In particular, the conditions in section 3(e) and 3(A) of the NGA require notice of the application for new LNG terminal facilities be

(continued...)

43. As an initial matter, we find that while section 2(11) sets forth a very broad definition of an "LNG Terminal," that encompasses "all natural gas facilities that are used to receive, unload, load, store, transport, gasify, liquefy, or process gas,"[78] it does not seek to redefine the term "natural gas facilities" as commonly understood for purposes of Commission jurisdiction.[79] As discussed above, to date the Commission has only asserted NGA jurisdiction under either section 3 or 7 over natural gas pipeline and storage facilities, including LNG facilities, that receive and/or send out gas by pipeline.[80] We do not find that the waterborne vessels, trucks, and/or trains that Shell will use to import Canadian LNG will be "natural gas facilities." Further, there will be no pipeline interconnections at the mooring facilities that Shell may use to transfer its LNG imported by ship to other ships or to onshore facilities that will store the LNG until it is transferred to another ship or loaded onto trucks or trains for delivery to vehicular fueling stations or

---

given to the state commission or the Governor-appointed state agency for purposes of consulting with the Commission regarding state and local safety considerations; opportunity for the state agency to furnish an advisory report on state and local safety considerations; a response by the Commission addressing the specific issues raised by the state agency in the advisory report; opportunity for the state commission to conduct its own safety inspections if the Commission approves the LNG terminal; development by the applicant of an Emergency Response Plan prepared in consultation with the United States Coast Guard and state and local agencies and approval by the Commission; and a cost-sharing plan including a description of any direct cost reimbursements that the applicant agrees to provide to any state and local agencies with responsibility for security and safety at the LNG terminal or in proximity to LNG tankers accessing the terminal.

[78] Indeed, a literal reading of section 2(11)'s definition of "LNG Terminal" would cause otherwise NGA-exempt gathering, intrastate pipeline, processing, and local distribution facilities to be jurisdictional under section 3 as LNG terminal facilities if they transport gas that was imported or gas that will be exported.

[79] As discussed above, the Commission dismissed The Gas Company's application for authorization of pier facilities as jurisdictional LNG terminal facilities under section 3 because "[w]e do not believe these pier facilities constitute 'natural gas facilities' as that term is used in the section 2(11) definition [of LNG terminal]." *The Gas Company* 142 FERC ¶ 61,036 at P 14.

[80] *See Order Terminating Proposed Rulemaking Proceeding,* 49 FPC 1078, 1079 (finding that the Commission has jurisdiction only over transportation of LNG by pipeline, and not transportation of LNG by motor carrier, barge, or rail.)

other end users.[81] Accordingly, we find that none of the facilities that Shell plans to use in LNG import operations will constitute an "LNG Terminal" subject to the Commission's jurisdiction under section 3.[82]

4. Shell's Geismar Facility will not be subject to the Commission's NGA Section 3 Jurisdiction as an LNG Terminal operating in interstate commerce

44. The only facility described in Shell's petition that would have an interconnecting pipeline is the planned liquefaction facility at its chemical plant on the Mississippi River in Geismar, Louisiana. Shell also acknowledges that while its initial plans at that location do not include any storage facilities to hold LNG when it commences liquefaction operations, it may want to install storage capacity in the future.[83] As was the case with

---

[81] We note that our conclusions are consistent with reports prepared by the Congressional Research Service (CRS), which assume that all LNG terminals subject to the Commission's jurisdiction following the enactment of EPAct 2005 would have an interconnecting pipeline: "LNG terminals may affect pipeline infrastructure in two ways. First, new terminals and terminal expansions must be connected to the interstate pipeline network through sufficient 'takeaway' pipeline capacity to handle the large volumes of imported natural gas. Depending upon the size, location, and proximity of a new terminal to existing pipelines, ensuring adequate takeaway capacity may require new pipeline construction." January 31, 2006 report by CRS on *LNG in U.S. Energy Policy: Infrastructure and Market Issues* at 12: "It is not clear, therefore, whether adding LNG supplies to traditional producing regions would be less costly for consumers than building in-market terminals and adding to regional pipeline capacity." *Id. See also* December 14, 2009 report by CRS on *LNG Import Terminals: Siting, Safety, and Regulation*: "This report also deals primarily with those parts of LNG terminals which transfer, store, and process LNG prior to injection to natural gas pipelines for transmission off site" (*id.* at 2), and "Onshore terminals consist of docks, LNG handling equipment, storage tanks, and interconnections to regional gas transmission pipelines." *Id.* at 3.

[82] While we have determined that Shell will not need to apply to the Commission for authorization under section 3 for the siting, construction, and operation of any its facilities to import LNG from Canada, DOE has retained the section 3 jurisdiction to approve or deny applications for import and export authority. Therefore, we do not address the issue of whether Shell will need authorization under section 3 jurisdiction to import Canadian LNG.

[83] Shell's *Petition* at 20.

the facilities Shell will use in conjunction with its importation of LNG, prior to the enactment of EPAct 2005, we would not have had cause to consider whether Shell's planned facilities to liquefy domestic gas and load LNG onto waterborne vessels at Geismar, Louisiana, would be subject to our section 3 jurisdiction, in this case because prior to EPAct 2005 section 3 only applied to facilities used to import or export gas. However, we must now examine whether section 2(11)'s inclusion of the phrase "transported in interstate commerce by waterborne vessel" might affect our jurisdictional determination. For the reasons discussed below, we conclude that the Geismar facility will not be an LNG terminal subject to section 3.

45. There is no significant functional difference between an inland LNG facility, commonly referred to as a "peaker" that liquefies and stores gas for subsequent revaporization (and may include facilities to load LNG onto trucks or trains for transport to a revaporization site) and a waterside facility, commonly referred to as a "terminal" that either receives gas as LNG from a waterborne vessel for revaporization or liquefies gas for delivery as LNG to a waterborne vessel. While the only waterside facilities the Commission has dealt with to date have been coastal facilities, i.e., terminals, which have been authorized under NGA section 3 because the facilities were to be used to import or export gas in foreign commerce, there is no question that the Commission's section 7 jurisdiction would encompass a waterside facility that would receive gas by jurisdictional pipeline which is liquefied, loaded onto a waterborne vessel, transported to a second state, then revaporized and injected into a jurisdictional pipeline.[84] Similarly, an LNG

---

[84] As noted above, in 1975 when Marathon and Phillips planned to use the existing Kenai LNG terminal to sell Alaska gas production to a Hinshaw pipeline in Oregon, the Commission was already regulating the exports of gas from the Kenai LNG terminal to Japan. The Commission found that if the Kenai facilities would also be used for interstate transportation, then the pipelines bringing gas from production fields to the Kenai LNG facilities would need section 7 certificate authorization before the facilities could be used to transport, liquefy, and load gas onto tankers that would take the LNG to Oregon. *Marathon*, 53 FPC 2164, 2173. In 1979, another proposed project (that never came to fruition) contemplated the construction of new LNG terminals at Nikiski, Alaska, and in California. The terminal in California would be used to receive LNG from both Alaska and Indonesia for distribution and use in California. The Commission found that "with respect to the gas from Alaska, no issues arise under Section 3 of the NGA; all issues arise under Section 7 of the NGA," and under section 7 the Commission had "exclusive jurisdiction to decide all Natural Gas Act issues" concerning the "construction and operation of facilities [in Alaska]... as well as the sale of that gas to the project sponsors' customers in California." *Pacific Alaska LNG Company*, 9 FERC ¶ 61,041, at 61,091 (1979) (*Pacific Alaska LNG*). Because both Alaskan and Indonesian gas would

(continued...)

terminal receiving LNG transported in interstate commerce by waterborne vessel would be subject to section 7 jurisdiction if any of the gas received at the terminal would be revaporized and injected into a jurisdictional pipeline. Such facilities would be links in an interstate chain, liquefying and regasifying in order to enable gas to be ferried across a stretch of water interrupting what would otherwise be a continual flow of gas by pipeline from one state to another.

46. The Geismar facility will not serve to bridge pipelines divided by water; rather, it will liquefy gas to transform it into a product for sale and delivery in its liquid state to end users, with no intent for any of the LNG to be reintroduced into a pipeline. Therefore, consistent with our above-discussed, long-standing precedent, because Geismar will not liquefy gas in order for it to be transported to a downstream pipeline, but will do so to provide LNG as a product for delivery to end-use consumers, Geismar will not be transporting gas in interstate commerce subject to the Commission's NGA section 7 jurisdiction.

47. As discussed above, the Commission has interpreted and exercised its delegated section 3 jurisdiction over import/export facilities consistent with how it has interpreted and exercised its section 7 jurisdiction over facilities used to transport gas in interstate commerce. Just as the Commission has determined that its section 7 jurisdiction does not extend to facilities used solely for the purpose of liquefying gas to supply LNG to end users, the same rationale would exempt Geismar from section 3 jurisdiction as long as, as Shell represents, all the LNG leaving Geismar is delivered in its liquid state to the ultimate end users in the United States.[85] Thus, Shell's proposed Geismar liquefaction facility will not be subject to Commission jurisdiction under section 3 as a section 2(11)

---

be delivered to the same terminal in California, both section 3's foreign commerce and section 7's interstate commerce jurisdiction would apply to that proposed facility.

[85] Shell represents that all of its LNG supplies will leave its facilities, including the planned liquefaction facility in Geismar, Louisiana, by non-pipeline modes of transportation, which may include trucks and trains as well as waterborne vessels, and reach the ultimate end users of the gas without entering a pipeline. As noted above at note 77, the literal language of section 2(11) is extremely expansive. We do not, however, believe that Congress intended its adoption of section 2(11)'s definition of "LNG terminal" to expand the Commission's NGA jurisdiction to encompass facilities, including facilities that may be far inland, that do not receive gas from a jurisdictional interstate pipeline and which are constructed for the purpose of liquefying gas that can reach the ultimate end users of gas without ever entering a pipeline, simply because waterborne vessels will be one of the non-pipeline modes of transportation that will be used to deliver some of the gas liquefied at the facilities.

LNG terminal by virtue of the fact that Geismar will produce LNG which will be transported in interstate commerce by waterborne vessel. Consequently, Shell will not need to file an application under NGA section 3 for authorization to construct and operate this planned liquefaction facility.

48. As discussed above, there is no question that in the situation where a facility in one state receives gas by jurisdictional pipeline for liquefaction and send out, via waterborne vessel, to facilities in a second state where the gas is revaporized and injected into a jurisdictional pipeline, the Commission would have jurisdiction under NGA section 7 over the facilities in both states. However, there could be a regulatory gap with respect to the facilities in the second state if, instead of being injected into a jurisdictional pipeline for transportation to destinations outside the receiving state, all of the gas is to be consumed within that second state. In such an instance, the Commission would potentially have jurisdiction over only the upstream send-out end of the interstate transaction, since it could be argued that the receiving facilities, i.e., the terminal and pipeline in the second state, would be exempt from Commission jurisdiction under section 1(b) as local distribution facilities or under section 1(c) as Hinshaw facilities.[86] Thus, we find that the purpose of the section 2(11) definition of "LNG terminal," by including facilities used in relation to natural gas that is "transported in interstate commerce by waterborne vessel," while at the same time excluding facilities "subject to the jurisdiction of the Commission under section 7" is to provide the Commission with jurisdiction over the natural gas facilities on *both* ends of the *interstate* transportation of LNG when a facility receiving gas by pipeline will send out LNG by waterborne vessel to a facility in a second state that will revaporize the LNG and inject the gas into pipelines

---

[86] In *Pacific Alaska LNG*, the proposed LNG terminal in California would have been used for imported LNG as well as for Alaskan LNG, thus the Commission would have had jurisdiction under NGA section 3 regardless of whether the Hinshaw exemption in section 1(c) applied to exempt the LNG terminal from section 7 jurisdiction for interstate shipments from Alaska. Thus, the issue of the applicability of the Hinshaw exemption in *Pacific Alaska LNG* was limited primarily to the 112-mile take-away pipeline for the proposed LNG terminal, which the Presiding Administrative Law Judge found would be exempt from the Commission's section 7 jurisdiction as a Hinshaw pipeline under section 1(c). *Pacific Alaska LNG Co, et al.*, 8 FERC ¶ 63,032, at 65,299 (1979). However, as noted below, in 2004 when the Commission approved a proposed LNG terminal to be located in California, the California Public Utilities Commission (CPUC) argued that its state approval also was necessary before the project could go forward, and the CPUC did not drop its judicial challenge until EPAct 2005 clarified the Commission's exclusive jurisdiction. *Sound Energy Solutions*, 108 FERC ¶ 61,155 (2004).

for transportation to end users within that state. Similarly, section 2(11) operates, in conjunction with the language in section 3(e)(1), to clarify that the Commission has jurisdiction over LNG terminals importing gas which will all be consumed in the state in which the terminal is located.

49. The potential need for this jurisdictional clarification was highlighted at the time Congress was considering the legislation that became EPAct 2005 by pending proceedings in which the State of California challenged the Commission's exclusive jurisdiction over a proposed LNG terminal that would receive gas which would be consumed entirely within California.[87] While that proposed LNG facility would have been an import terminal, EPAct 2005's enactment of NGA section 3(e) and section 2(11)'s definition of "LNG terminal" clarified that the Commission had "exclusive jurisdiction" over the siting, construction, and operation of all LNG import and export terminals, including a proposed LNG terminal that would receive LNG that would be consumed entirely within the state where the terminal is located.[88] By including the "waterborne vessel in interstate commerce" language in the definition of LNG terminal, we believe Congress similarly clarified that when LNG supplies are delivered by waterborne vessels from one state to another state, the LNG terminal facilities receiving the waterborne vessels are not NGA-exempt local distribution or Hinshaw facilities as contemplated by the NGA's exemptions, and thereby ensured, albeit under section 3

---

[87] *Sound Energy Solutions*, 106 FERC ¶ 61,279, *order denying reh'g and stay and clarifying prior order*, 107 FERC ¶ 61,263, *order clarifying prior order*, 108 FERC ¶ 61,155 (2004).

[88] The CRS's December 14, 2009 report titled *LNG Import Terminals: Siting, Safety, and Regulation* stated:

> Federal and state government agencies have had jurisdictional disagreements specifically relating to the siting of new LNG terminals. In February 2004, for example, the California Public Utilities Commission (CPUC) disputed FERC's jurisdiction over the siting of a proposed LNG terminal at Long Beach because, in the CPUC's opinion, the terminal would not be involved in interstate sales or transportation and therefore would not come under the Natural Gas Act. ... The Energy Policy Act of 2005 effectively codified FERC's jurisdictional rulings, however, leading the CPUC to drop its lawsuit challenging FERC's LNG siting authority in September 2005. Notwithstanding the CPUC case, other state challenges to FERC jurisdiction remain a possibility.

Id. at 16-17.

rather than section 7, that the Commission's jurisdiction encompasses LNG terminal facilities operating in interstate commerce.

50. Given that the Commission's jurisdiction under section 7 over existing or proposed facilities that would be used to send out LNG by waterborne vessel to another state where the LNG would be revaporized and injected into a jurisdictional pipeline has never been questioned, we do not view the "waterborne vessel in interstate commerce" language as encompassing those upstream send-out facilities.[89] Further, by explicitly excluding "any pipeline or storage facility" subject to section 7 from the section 2(11) definition, Congress preserved the Commission's ability to regulate the rates, terms, and conditions for service on facilities integral to the interstate grid.[90]

IV. Summary

51. For the reasons discussed herein, we find: (1) Shell's described transportation of LNG by non-pipeline modes of transportation will not be subject to our jurisdiction under section 7 of the NGA over the transportation of gas in interstate commerce; (2) Shell's facilities used to receive imported Canadian LNG transported by waterborne vessels and to liquefy and send out domestic LNG by waterborne vessels that will be delivered to the ultimate end users without entering a pipeline system will not be subject to our jurisdiction as LNG terminals under section 3 of the NGA; and (3) any of Shell's sales of LNG for resale that may be subject to our jurisdiction under section 7 of the NGA will be authorized under the automatic blanket certificate provided by section 284.402 of our regulations.

The Commission orders:

(A) Shell's petition for a declaratory order that it will not need to apply to the Commission for authorization under either section 3 or section 7 of the NGA for its facilities and activities is granted for the reasons discussed herein.

---

[89] Such facilities, whether at a ship-accessible waterside quay or at a land-locked inland location, would be subject to section 7, and consequently, in accord with the section 2(11)(B) provision that exempts "any pipeline or storage facility" subject to section 7 from the definition of an "LNG terminal," would not be subject to section 3.

[90] As noted above, the conditions added by EPAct 2005 in NGA section 3(e) provide that, prior to January 1, 2015, the Commission may not condition authorization for a new LNG terminal or terminal expansion on the terminal operator offering open-access service or filing acceptable rates and other conditions of service.

(B) Clean Energy Fuels Corporation's motion to intervene out-of-time is granted.

By the Commission. Commissioner Bay is concurring in part and dissenting in part with a separate statement attached.

(S E A L)

Kimberly D. Bose,
Secretary.

UNITED STATES OF AMERICA
FEDERAL ENERGY REGULATORY COMMISSION

Shell U.S. Gas & Power, LLC Docket No. RP14-52-000

(Issued September 4, 2014)

BAY, Commissioner, *concurring in part and dissenting in part*:

I concur with the majority's determination that Shell U.S. Gas & Power LLC's proposed activities do not fall within the jurisdictional exemption created by section 1(d) of the Natural Gas Act. I disagree with the majority's conclusion regarding the scope of the Commission's jurisdiction under section 3 of the Act.

The Energy Policy Act of 2005 "explicitly provides the Commission with exclusive authority over LNG terminals subject to our section 3 jurisdiction." *The Gas Company*, 142 FERC ¶ 61,036, P 17 (2013). The majority acknowledges that, in doing so, Congress employed "a very broad definition of 'LNG Terminal'" (Order P 43); namely, "*all* natural gas facilities located onshore or in State waters that are used to receive, unload, load, store, transport, gasify, liquefy, or process natural gas" that is imported to, or exported from, the United States, or "transported in interstate commerce by waterborne vessel." 15 U.S.C. § 717a(11) (emphasis added).

It is beyond dispute that Shell's proposed Canadian project will involve facilities that will "receive," "unload" and "store" "natural gas that is imported [from Canada] to the United States." Similarly, the proposed Geismar project would "receive" and "liquefy" natural gas and then load it on to "waterborne vessels" for "transport in interstate commerce." *See* Order PP 4-5. Nonetheless, the majority finds that neither involves an "LNG terminal" within the meaning of section 2(11) of the Natural Gas Act, 15 U.S.C. § 717a(11). That conclusion cannot be squared with the plain language of the Act.

The majority's determination is based, in part, on the fact that the Commission has generally limited its jurisdiction under section 7 of the Natural Gas Act to facilities that send or receive natural gas by pipeline. *See* Order P 43. But section 7 speaks of the Commission's jurisdiction over "transportation facilities." *See* 15 U.S.C. § 717f(a). Section 2(11) defines "LNG terminals" to include "all natural gas facilities," not merely natural gas "transportation facilities." *See* 15 U.S.C. § 717a(11) ("'LNG terminal' includes all natural gas facilities ... that are used to receive, unload, load, store, [or] transport ... natural gas"). The former is clearly broader than the latter, and had Congress intended a more limited approach it could have used the language of section 7 in section 3. The majority also argues that, although the projects – in particular, the Geismar project – will involve natural gas "transported in interstate commerce by

waterborne vessel," the only waterborne transportation that counts for purposes of section 2(11) is interstate delivery to a facility that is connected to a pipeline (whether intrastate or interstate). *See* Order PP 43, 48. In support, the majority points to a jurisdictional dispute between California and FERC involving this fact pattern that preceded the enactment of the Energy Policy Act of 2005. *Id.* If anything, that history suggests that Congress intended to pre-empt state action and used broad language to accomplish that result, providing "exclusive authority" to FERC with respect to LNG terminals, 15 U.S.C. § 717b(e)(1), including "all natural gas facilities" in which natural gas was "transported in interstate commerce by waterborne vessel," *id.* § 717a(11).

While one might debate the relative policy arguments for or against a finding of FERC jurisdiction, we are constrained, as we should be, by the language of the statute. Here, I believe the plain meaning of the statute compels a different result. Accordingly, I must respectfully dissent.

Norman C. Bay
Commissioner

Document Content(s)

Subject:	USCG call (202-372-1420)
Location:	call direct to USCG
Start:	Tue 10/23/2018 3:30 PM
End:	Tue 10/23/2018 4:00 PM
Show Time As:	Tentative
Recurrence:	(none)
Meeting Status:	Not yet responded
Organizer:	Andrew Kohout
Required Attendees:	Jacqueline Holmes; Gordon Wagner; John Katz; Rich McGuire; Shannon Jones

Discussion with USCG on New Fortress liquefied natural gas facility in state waters with transfer to onshore to four truck loading facilities (with or without an onshore storage buffer tank). LNG carriers on weekly basis.

Information withheld pursuant to FOIA Exemption 6.

Subject: Meeting: Fortress
Location: 61-06 CR

Start: Thu 9/7/2017 10:00 AM
End: Thu 9/7/2017 10:50 AM
Show Time As: Tentative

Recurrence: (none)

Meeting Status: Not yet responded

Organizer: [redacted]
Required Attendees: [redacted]; Andrew Kohout; Brian S. White; [redacted]; Danny Laffoon; [redacted] David Swearingen; [redacted]; Gordon Wagner; Heather Campbell; [redacted] Jacqueline Holmes; James Martin; Joel Arneson; [redacted]; [redacted]; [redacted]; Laura Kane; [redacted]; Nils Nichols; [redacted]; PJ-10; PJ-10 1; PJ-10 2; Rich McGuire; [redacted]; [redacted]; Shannon Jones; Terry Turpin; [redacted]; brogers@fortress.com; jdecker@velaw.com; cterhune@velaw.com; Wilson, Anita (awilson@velaw.com)

Please mark your calendar and confirm your attendance to meet with representatives from Fortress to discuss whether FERC would assert jurisdiction over a project that will consist of the following elements: installation of facilities to liquefy natural gas at the wellhead, transportation of LNG by rail or by truck to a private port facility being developed by another subsidiary of Fortress at the DuPont Rapauno site in Greenwich Township, New Jersey, loading the LNG onto tankers for export.

Attendees:

Britt Rogers
John Decker
Christopher Terhune
Anita Wilson

Information withheld pursuant to FOIA Exemption 6.

From: Jacqueline Holmes
Sent: Thursday, August 31, 2017 11:12 AM
To: [redacted]; Andrew Kohout; Brian S. White; [redacted]; Danny Laffoon; [redacted]; David Swearingen; [redacted]; Gordon Wagner; Heather Campbell; [redacted]; James Martin; Joel Arneson; [redacted]; [redacted] Laura Kane; Medha Kochhar; Nils Nichols; [redacted]; PJ-10; PJ-10 1; PJ-10 2; Rich McGuire; [redacted]; [redacted]; Shannon Jones; Terry Turpin; [redacted]; jdecker@velaw.com
Cc: [redacted]
Subject: RE: Meeting: Fortress

Importance: High

Sorry – my bad. As much as I know many of you may really be looking forward to this (and don't let me dissuade you if you really want to go), I think we can do with a smaller group: Terry, John Wood, Heather, Gordon, [redacted], (Joel, Sandy, [redacted], and/or John Katz if they are interested), Rich McGuire, P.J., Rich Foley, Marsha, and Andrew (and any they want to include). Thanks!

-----Original Appointment-----
From: [redacted]
Sent: Thursday, August 31, 2017 10:45 AM
To: [redacted]; Andrew Kohout; Brian S. White; [redacted]; Danny Laffoon; [redacted]; David Swearingen; [redacted]; Gordon Wagner; Heather Campbell; [redacted]; Jacqueline Holmes; James Martin; Joel Arneson; [redacted]; Laura Kane; [redacted]; Nils Nichols; [redacted]; PJ-10; PJ-10 1; PJ-10 2; Rich McGuire; [redacted]; [redacted]; Shannon Jones; Terry Turpin; [redacted]; brogers@fortress.com; jdecker@velaw.com; cterhune@velaw.com; Wilson, Anita (awilson@velaw.com)
Subject: Meeting: Fortress
When: Thursday, September 07, 2017 10:00 AM-10:50 AM (UTC-05:00) Eastern Time (US & Canada).
Where: 61-06 CR

Please mark your calendar and confirm your attendance to meet with representatives from Fortress to discuss whether FERC would assert jurisdiction over a project that will consist of the following elements: installation of facilities to liquefy natural gas at the wellhead, transportation of LNG by rail or by truck to a private port facility being developed by another subsidiary of Fortress at the DuPont Rapauno site in Greenwich Township, New Jersey, loading the LNG onto tankers for export.

Attendees:

Britt Rogers
John Decker
Christopher Terhune
Anita Wilson

Information withheld pursuant to FOIA Exemption 6.

5

Vinson&Elkins

Memorandum

Christopher J. Terhune cterhune@velaw.com
Tel +1.202.639.6629

Date: September 7, 2017

To: Britt Rogers

From: Anita R. Wilson
Christopher J. Terhune

Re: Repauno Port – Meeting with FERC Staff

On September 7, 2017, Britt Rogers, Anita Wilson, and Chris Terhune met with various members of the staff of the Federal Energy Regulatory Commission ("FERC") to discuss the Repauno Port project and whether the project would be subject to FERC's jurisdiction under the Natural Gas Act. This memorandum summarizes the discussion at that meeting.

FERC Staff Attendees: Rich McGuire (Director of Gas Environment and Engineering within the Office of Energy Projects ("OEP")), Andrew Kohout (Chief of LNG Branch 1 within Gas Environment and Engineering), Hugh Thomas (Chief of LNG Branch 2 within Gas Environment and Engineering), Pamela Boudreau (Acting Director of the Division of Pipeline Certificates within OEP), Richard Foley (Chief of Certificate Branch 1 within the Division of Pipeline Certificates), Marsha Palazzi (Chief of Certificate Branch 2 within the Division of Pipeline Certificates), Gordon Wagner (Senior Attorney in the Office of General Counsel), and Cyrus Zarraby (Attorney Advisor in the Office of General Counsel).

Summary: Mr. Rogers introduced Fortress Transportation and Infrastructure Investors ("FTAI") and its various port assets. He then described the Repauno Port project and the activities FTAI may undertake there, including potential transloading of ethane, butane, liquid petroleum gas, and LNG. Mr. Rogers noted that the facility would receive trucks or trains carrying LNG (and have no pipeline connections), then load that LNG onto waterborne vessels. Mr. Rogers also noted that FTAI was working with the New Jersey Department of Environmental Protection and the U.S. Coast Guard on permitting for the port. Mr. Rogers explained that FTAI's outside counsel (Vinson & Elkins) had determined the project would be non-jurisdictional but FTAI wanted confirmation of this analysis from FERC Staff prior to making a large capital investment or representations to customers.

Gordon Wagner, the most senior lawyer in the room from FERC, agreed that the Repauno Port would be non-jurisdictional as described. He specifically pointed to two FERC orders – *The Gas Company, LLC* and *Shell U.S. Gas & Power, LLC* – as supporting this conclusion, which was consistent with the Vinson & Elkins analysis. FERC Staff noted that (1) they were speaking about the policy as it

currently exists and that policy can change in the future and (2) the only way to obtain certainty is to seek a Declaratory Order from FERC that the port is non-jurisdictional.

FERC Staff noted that, if gas from a pipeline was used to make LNG, that LNG was loaded at the Repauno Port, then the LNG was later regasified and injected back into a pipeline system in the U.S., the facility could become subject to FERC's jurisdiction under Section 7 of the Natural Gas Act as a link in an interstate pipeline chain. The potential introduction of liquefaction at the port was another wrinkle that Staff suggested could give rise to jurisdiction.

FERC Staff noted that, under the current proposal, the port would have no liquefaction, no storage, and no pipeline interconnection. Changing one or more those factors would make the port look more and more like an "LNG terminal" that would be subject to FERC's jurisdiction under Section 3 of the Natural Gas Act. Staff confirmed, however, that the current proposal, which does not have liquefaction, storage, or a pipeline interconnection, was non-jurisdictional under current FERC policy and recent caselaw. FERC Staff also affirmed that the port would remain non-jurisdictional in a hypothetical where gas went through a pipeline to a liquefaction facility away from the port, then was transported by truck or rail to the port and loaded onto a ship for export.

Mr. Rogers informed FERC that, based on this discussion, FTAI did not intend to file a Petition for Declaratory Order or consult FERC further unless the structure of the Repauno Port or FERC policy changed in such a way as to move the project outside the clear bounds of then-current FERC policy and precedent regarding its jurisdiction over LNG facilities.

From: Jacqueline Holmes
Sent: Thursday, August 31, 2017 11:12 AM
To: [redacted]; [redacted]; Andrew Kohout; Brian S. White; [redacted]; Danny Laffoon; [redacted]; David Swearingen; [redacted]; Gordon Wagner; Heather Campbell; [redacted]; James Martin; Joel Arneson; [redacted] Laura Kane; [redacted]; Nils Nichols; [redacted]; PJ-10; PJ-10 1; PJ-10 2; Rich McGuire; [redacted]; [redacted]; Shannon Jones; Terry Turpin; [redacted]; jdecker@velaw.com
Cc: [redacted]
Subject: RE: Meeting: Fortress

Importance: High

Sorry – my bad. As much as I know many of you may really be looking forward to this (and don't let me dissuade you if you really want to go), I think we can do with a smaller group: Terry, John Wood, Heather, Gordon, [redacted] (Joel, Sandy, [redacted] and/or John Katz if they are interested), Rich McGuire, P.J., Rich Foley, Marsha, and Andrew (and any they want to include). Thanks!

-----Original Appointment-----
From: [redacted]
Sent: Thursday, August 31, 2017 10:45 AM
To: [redacted]; Andrew Kohout; Brian S. White; [redacted]; Danny Laffoon; [redacted]; David Swearingen; [redacted]; Gordon Wagner; Heather Campbell; [redacted] Jacqueline Holmes; James Martin; Joel Arneson; [redacted]; Laura Kane; [redacted]; Nils Nichols; [redacted]; PJ-10; PJ-10 1; PJ-10 2; Rich McGuire; [redacted]; Shannon Jones; Terry Turpin; [redacted]; brogers@fortress.com; jdecker@velaw.com; cterhune@velaw.com; Wilson, Anita (awilson@velaw.com)
Subject: Meeting: Fortress
When: Thursday, September 07, 2017 10:00 AM-10:50 AM (UTC-05:00) Eastern Time (US & Canada).
Where: 61-06 CR

Please mark your calendar and confirm your attendance to meet with representatives from Fortress to discuss whether FERC would assert jurisdiction over a project that will consist of the following elements: installation of facilities to liquefy natural gas at the wellhead, transportation of LNG by rail or by truck to a private port facility being developed by another subsidiary of Fortress at the DuPont Rapauno site in Greenwich Township, New Jersey, loading the LNG onto tankers for export.

Attendees:

Britt Rogers
John Decker
Christopher Terhune
Anita Wilson

Information withheld pursuant to FOIA Exemption 6.

Vinson&Elkins

Memorandum

Christopher J. Terhune cterhune@velaw.com
Tel +1.202.639.6629

Date: September 7, 2017

To: Britt Rogers

From: Anita R. Wilson
Christopher J. Terhune

Re: Repauno Port – Meeting with FERC Staff

On September 7, 2017, Britt Rogers, Anita Wilson, and Chris Terhune met with various members of the staff of the Federal Energy Regulatory Commission ("FERC") to discuss the Repauno Port project and whether the project would be subject to FERC's jurisdiction under the Natural Gas Act. This memorandum summarizes the discussion at that meeting.

FERC Staff Attendees: Rich McGuire (Director of Gas Environment and Engineering within the Office of Energy Projects ("OEP")), Andrew Kohout (Chief of LNG Branch 1 within Gas Environment and Engineering), Hugh Thomas (Chief of LNG Branch 2 within Gas Environment and Engineering), Pamela Boudreau (Acting Director of the Division of Pipeline Certificates within OEP), Richard Foley (Chief of Certificate Branch 1 within the Division of Pipeline Certificates), Marsha Palazzi (Chief of Certificate Branch 2 within the Division of Pipeline Certificates), Gordon Wagner (Senior Attorney in the Office of General Counsel), and Cyrus Zarraby (Attorney Advisor in the Office of General Counsel).

Summary: Mr. Rogers introduced Fortress Transportation and Infrastructure Investors ("FTAI") and its various port assets. He then described the Repauno Port project and the activities FTAI may undertake there, including potential transloading of ethane, butane, liquid petroleum gas, and LNG. Mr. Rogers noted that the facility would receive trucks or trains carrying LNG (and have no pipeline connections), then load that LNG onto waterborne vessels. Mr. Rogers also noted that FTAI was working with the New Jersey Department of Environmental Protection and the U.S. Coast Guard on permitting for the port. Mr. Rogers explained that FTAI's outside counsel (Vinson & Elkins) had determined the project would be non-jurisdictional but FTAI wanted confirmation of this analysis from FERC Staff prior to making a large capital investment or representations to customers.

Gordon Wagner, the most senior lawyer in the room from FERC, agreed that the Repauno Port would be non-jurisdictional as described. He specifically pointed to two FERC orders – *The Gas Company, LLC* and *Shell U.S. Gas & Power, LLC* – as supporting this conclusion, which was consistent with the Vinson & Elkins analysis. FERC Staff noted that (1) they were speaking about the policy as it

currently exists and that policy can change in the future and (2) the only way to obtain certainty is to seek a Declaratory Order from FERC that the port is non-jurisdictional.

FERC Staff noted that, if gas from a pipeline was used to make LNG, that LNG was loaded at the Repauno Port, then the LNG was later regasified and injected back into a pipeline system in the U.S., the facility could become subject to FERC's jurisdiction under Section 7 of the Natural Gas Act as a link in an interstate pipeline chain. The potential introduction of liquefaction at the port was another wrinkle that Staff suggested could give rise to jurisdiction.

FERC Staff noted that, under the current proposal, the port would have no liquefaction, no storage, and no pipeline interconnection. Changing one or more those factors would make the port look more and more like an "LNG terminal" that would be subject to FERC's jurisdiction under Section 3 of the Natural Gas Act. Staff confirmed, however, that the current proposal, which does not have liquefaction, storage, or a pipeline interconnection, was non-jurisdictional under current FERC policy and recent caselaw. FERC Staff also affirmed that the port would remain non-jurisdictional in a hypothetical where gas went through a pipeline to a liquefaction facility away from the port, then was transported by truck or rail to the port and loaded onto a ship for export.

Mr. Rogers informed FERC that, based on this discussion, FTAI did not intend to file a Petition for Declaratory Order or consult FERC further unless the structure of the Repauno Port or FERC policy changed in such a way as to move the project outside the clear bounds of then-current FERC policy and precedent regarding its jurisdiction over LNG facilities.

THIS IS NOT A PAID ADVERTISEMENT

Public Notice

US Army Corps of Engineers.
Philadelphia District
Wanamaker Building
100 Penn Square East
Philadelphia, PA 19107-3390
ATTN: CENAP-OP-R

Public Notice No. CENAP-OP-R-2016-0181-39
Date APR 04 2019
Application No.
File No.
In Reply Refer to: REGULATORY BRANCH

This District has received an application for a Department of the Army permit pursuant to Section 10 of the Rivers and Harbors Act of 1899 (33 U.S.C. 403) and Section 404 of the Clean Water Act (33 U.S.C. 1344).

The purpose of this notice is to solicit comments and recommendations from the public concerning issuance of a Department of the Army permit for the work described below.

APPLICANT: Mr. Gary Lewis
Delaware River Partners LLC
200 North Repauno Avenue
Gibbstown, New Jersey 08027

AGENT: Laura George
Ramboll Environ
1760 Market Street
Suite 1000
Philadelphia, PA 1910

WATERWAY: Delaware River

LOCATION: Block 8, Lots 2, 3, 4, 4.01 and 4.02, in the Gibbstown Section of Greenwich Township, Gloucester County, New Jersey. The site previously was known as the E.I. du Pont de Nemours & Company Repauno Works.

ACTIVITY: The applicant proposes to construct a second mooring structure, including an associated trestles, mooring dolphins, breasting dolphins, a shared dolphin, associated walkways and an internal pipe system for the transfer of product. Mechanical dredging would also be performed in the waterway. The proposed dock structure would allow for the mooring of 2 vessels at one time. Steel sheet piles would be installed landward of the existing timber cut-off wall that remains from the previous owner. From shore, a trestle would extend approximately 660' waterward of the mean high water line. From the waterward end of the land based structure, a 1611' long trestle will run parallel and downstream of the structure. These trestles would be 32' wide allowing for 1 lane of vehicular traffic and for a rack that would contain the proposed pipe system. These pipes would vary in size and contain multiple products, water, electricity and fire retardant. Two loading platforms, 138.5' by 85' would be constructed to allow for the loading/off-loading of product. The loading platforms would be connected to the

trestle by an approximately 88.5' by 45' structure, supported by 14-24" piles. The pipelines would go from the trestles to the loading platforms. Sixty 30" by 3/4" steel pipe piles would be required to install to support each loading platform. In order to secure the vessels at the site, 11 mooring dolphins 8 breasting dolphins and 1 shared dolphin would be installed at the site. The mooring dolphins would be 33' square and would be supported by 9-48" steel pipe piles; the breasting dolphins would also be 33' square and supported by 9-48" steel pipe piles; the shared dolphin would be 57' by 33' and supported by 15-48" steel pipe piles. Walkways would be installed between the dolphins to allow for securing of the vessels. Twelve 24" steel pipe piles would be installed to support all 1640 linear feet of the 7' wide walkways. The overall length of the structure would be 2550 linear feet. The waterward most structure would be located approximately 650' from the edge of the Federal Navigation Channel. Lighting fixtures on the structures would be installed as required by the US Coast Guard (shown on attached drawing).

An area approximately 45 acres in size would be dredged to a depth of -43 feet mean lower low water ± 1 foot overdraft. The material, compose primarily of a silt and clay, would be removed using mechanical excavation equipment. A closed environmental mechanical bucket would be used primarily to excavate the silt layer from the waterway. The bucket would remain closed over the water while the majority of the water drains from the material. The dredged material would then be placed in a hopper barge and allowed to decant, with the excess water returning to the waterway. Sediment testing confirms that the material meets the New Jersey Department of Environmental Protection's requirements with regard to contaminant levels. The material would then be taken directly to the Whites Basin Confined Disposal Facility (CDF) located in Logan Township, Gloucester County, New Jersey. A second option would be to load the material onto a barge and transported to the Fort Mifflin CDF, located in the City of Philadelphia, Philadelphia County, Pennsylvania. A separate permit would need to be obtained from the US Army Corps of Engineers, Operation Division before any material would be accepted at the Fort Mifflin CDF. For material destined for the Whites Basin facility, the dredged material will be placed directly into bottom-dump barges. These barges would then be transported by tugboat to the Whites Basin and discharged into the Basin in accordance with their operating permits. For material approved by the Corps for the Ft. Mifflin site, the dredged material would be mechanically dredged and placed directly into hopper barges. The hopper scows would then be transported by tugboat across the channel to a hydraulic unloader positioned on a spud barge located adjacent to the Ft. Mifflin CDF site. There, the material would be hydraulically unloaded from the hopper scows directly into one of the upland CDF cells at Ft. Mifflin. A total of approximately 665,000 cubic yards of material would be removed from the waterway. It is also noted that some of the materials dredged from the Delaware River may be used as fill for the development activities on the site.

Equipment to be used at the site for the proposed construction activities described herein would be located no closer than 50 feet from the edge of the Federal navigation channel. Remnants of an existing structure constructed approximately 100 years ago would remain in place and not be impacted by the work proposed at the site.

In addition to the proposed work along the Delaware River described in this public notice, other work is proposed on the subject property that would affect both upland and wetland areas on the former industrial property. However, those other portions of the subject property contain non-tidal waters and wetlands that are not within the regulatory jurisdiction of the U.S. Army Corps of Engineers pursuant to a decision by the U.S. Environmental Protection Agency on March 2,

1994 allowing the New Jersey Department of Environmental Protection to assume Section 404 permit authority for certain waters and wetlands within the State of New Jersey (Section 404(g)(1)). Under the provisions of this assumption by NJDEP, non-tidal tributaries of the Delaware River and their adjacent wetlands are not subject to the Corps of Engineers regulatory jurisdiction.

The site will be designed to handle a multitude of products including, butane, isobutane, propane, liquefied natural gas (LNG) and ethane, as well as a variety of other liquid products. The site will be designed to transload various liquid products from truck and railcar to vessels. As a transload facility, products will not be manufactured on site, but rather products will arrive on site in trucks or railcars and be transferred from those trucks and railcars through on-site infrastructure to vessels.

PURPOSE: The applicant's stated purpose is to redevelop a site and create a deep water marine terminal structure that can accommodate 2 vessels simultaneously. Each vessel would be a maximum length of 966 feet, a beam width of 155, with a maximum of a 42 foot draft.

A preliminary review of this application indicates that the proposed work may impact 2 fish species listed on the Endangered Species List pursuant to Section 7 of the Endangered Species Act as amended. The first would be the Short-nose Sturgeon (Acipenser brevirostrum) and the second would be Atlantic Sturgeon (Acipenser oxyrhynchus) and its proposed critical habitat. The applicant has stated that they are planning to perform the work using best management practices to minimizing impact to aquatic resources. As required under Section 7 of the Endangered Species Act, this office will coordinate with the National Marine Fisheries Service to ensure impacts to these species will be minimal.

The decision whether to issue a permit will be based on an evaluation of the activity's probable impact including its cumulative impacts on the public interest. The decision will reflect the national concern for both protection and utilization of important resources. The benefits which reasonably may be expected to accrue from the work must be balanced against its reasonably foreseeable detriments. All factors which may be relevant to the work will be considered including the cumulative effects thereof; among those are conservation, economics, aesthetics, general environmental concerns, wetlands, cultural values, fish and wildlife values, flood hazards, flood plain values, land use, navigation, shore erosion and accretion, recreation, water supply and conservation, water quality, energy needs, safety, food and fiber production, mineral needs and welfare of the people. A Department of the Army permit will be granted unless the District Engineer determines that it would be contrary to the public interest.

The Corps of Engineers is soliciting comments from the public; Federal, State, and local agencies and officials; Indian Tribes; and other interested parties in order to consider and evaluate the impacts of this proposed activity. Any comments received will be considered by the Corps of Engineers to determine whether to issue, modify, condition or deny a permit for this proposal. To make this decision, comments are used to assess impacts on endangered species, historic properties, water quality, general environmental effects, and the other public interest factors listed above. Comments are used in the preparation of an Environmental Assessment and/or an Environmental Impact Statement pursuant to the National Environmental Policy Act. Comments are also used to determine the need for a public hearing and to determine the overall public interest of the proposed activity.

Comments on the proposed work should be submitted, in writing, within 30 days to the District Engineer, U.S. Army Corps of Engineers, Philadelphia District, Wanamaker Building, 100 Penn Square East, Philadelphia, Pennsylvania 19107-3390.

The USACE has reviewed the report titled, Phase I Underwater Archaeological Investigations, Thompson Point, Repauno Site, Delaware River, Greenwich Township, Gloucester County, New Jersey prepared by Dolan Research, Inc. and dated February 2019. Analysis of fieldwork data confirms the presence of three magnetic targets and nine acoustic targets in the permit area; however, none of these targets are considered to be suggestive of potential submerged cultural resources and no further archaeological work is recommended.

The Magnuson-Stevens Fishery Conservation and Management Act, as amended by the Sustainable Fisheries Act 1996 (Public Law 104-267), requires all Federal agencies to consult with the National Marine Fisheries Service on all actions, or proposed actions, permitted, funded, or undertaken by the agency that may adversely effect on Essential Fish Habitat (EFH). Based on a review of the document entitled "Guide to Essential Fish Habitat Designations in the Northeastern United States, Volume IV: New Jersey and Delaware", dated March 1999, the site is not located in an area designated as EFH. However, it is noted that prey species for the species of concern are present in the project site. This office will coordinate with the National Marine Fisheries Service to ensure impacts to aquatic resources will be minimal.

Compensatory mitigation: According to Federal regulation located at 33 CFR 325.1(d)(7) and 33 CFR 332.4 (b)(1), applicants wishing to discharge fill material into waters of the U.S. must include a statement on how they have avoided and minimized impacts as well as how they intend to compensate for unavoidable impacts. The applicant does not propose the placement of fill within areas of Federal jurisdiction. As such, compensatory mitigation is not warranted in this matter.

In accordance with Section 307(c) of the Coastal Zone Management Act of 1972, applicants for Federal Licenses or Permits to conduct an activity affecting land or water uses in a State's coastal zone must provide certification that the activity complies with the State's Coastal Zone Management Program. The applicant has stated that the proposed activity complies with and will be conducted in a manner that is consistent with the approved State Coastal Zone Management (CZM) Program. No permit will be issued until the State has concurred with the applicant's certification or has waived its right to do so. Comments concerning the impact of the proposed and/or existing activity on the State's coastal zone should be sent to this office, with a copy to the State's Office of Coastal Zone Management. An application has been submitted to the New Jersey Department of Environmental Protection for the necessary State approvals, which would include the required CZM consistency concurrence.

In accordance with Section 401 of the Clean Water Act, a Water Quality Certificate is necessary from the State government in which the work is located. Any comments concerning the work described above which relate to Water Quality considerations should be sent to this office with a copy to the State.

The evaluation of the impact of the work described above on the public interest will include application of the guidelines promulgated by the Administrator, U.S. Environmental Protection Agency, under authority of Section 404(b) of the Clean Water Act.

Any person may request, in writing, to the District Engineer, within the comment period specified in this notice, that a public hearing be held to consider this application. Requests for a public hearing shall state in writing, with particularity, the reasons for holding a public hearing.

Additional information concerning this permit application may be obtained by calling Lawrence Slavitter at 215-656-6734, via email at: lawrence.m.slavitter@usace.army.mil, or writing this office at the above address.

Edward E. Bonner
Chief, Regulatory Branch

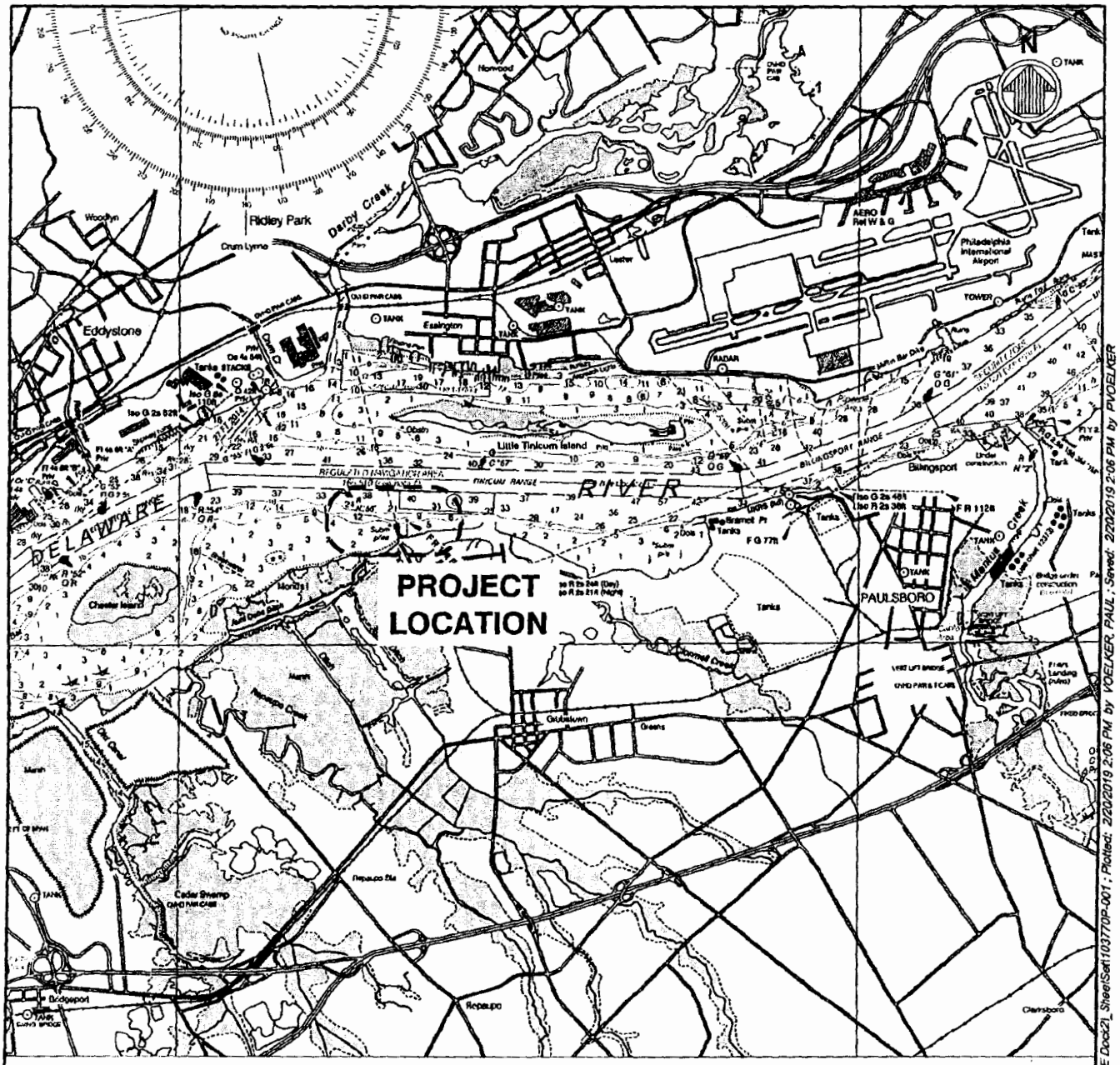

VICINITY MAP

NOTE:

BACKGROUND TAKEN FROM NOAA CHART 12312, 56TH ED., MAY 2012.

APPLICATION BY: DELAWARE RIVER PARTNERS LLC 200 N REPAUNO AVENUE GIBBSTOWN, NEW JERSEY 08027	DRP GIBBSTOWN LOGISTICS CENTER DOCK 2	2500' 0' 2500' 5000' SCALE: 1"=5000'
ENGINEER: moffatt & nichol	PROJECT LOCATION: DELAWARE RIVER GIBBSTOWN, GREENWICH TOWNSHIP, NEW JERSEY	DATE: FEBRUARY 21, 2019 SHEET 01 OF 20

File: Q:\BA\103\7 DRP Energy FD\500 CADD_ACTIVE_Permits_USACE Dock2_Sheet\Set\103770P-001 ; Plotted: 2/20/2019 2:06 PM by VOELKER, PAUL ; Saved: 2/20/2019 2:06 PM by PVOELKER

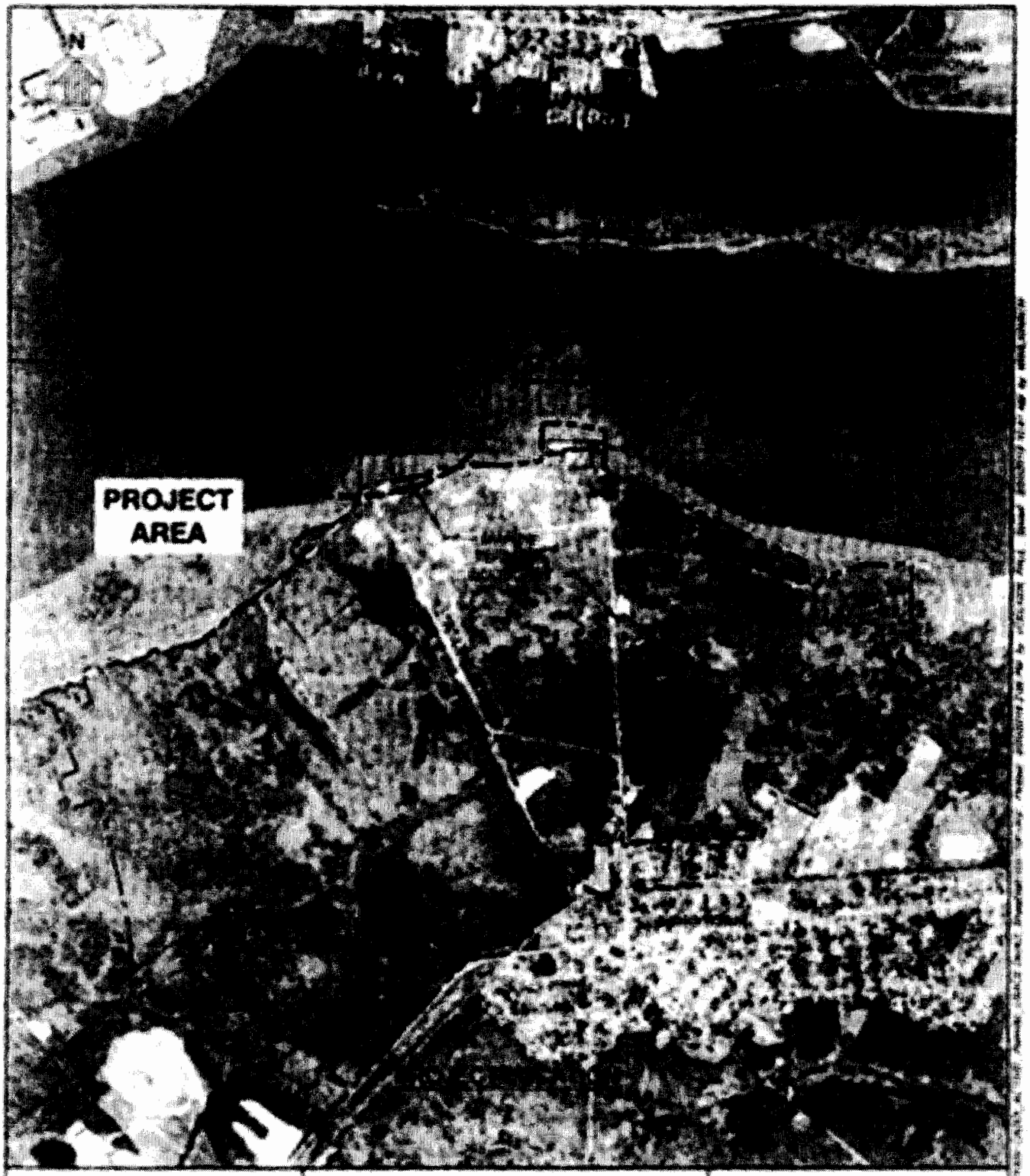

APPLICATION BY
DELAWARE RIVER PARTNERS LLC
200 N REGALIND AVENUE
GIBBSTOWN NEW JERSEY 08027

ENGINEER
moffatt & nichol

DRP GIBBSTOWN
LOGISTICS CENTER
DOCK 2

PROJECT LOCATION
DELAWARE RIVER
GIBBSTOWN GREENWICH TOWNSHIP NEW JERSEY

NONE FNSBM

DATE FEBRUARY 21 2010

SHEET 02 OF 20

GENERAL NOTES

1. NOTES BELOW ARE NOT INTENDED TO REPLACE SPECIFICATIONS. SEE SPECIFICATIONS FOR REQUIREMENTS IN ADDITION TO GENERAL NOTES.

2. EXISTING CONDITIONS SURVEY SHOWN IS BASED ON A REPORT OF TITLE PREPARED BY FIDELITY NATIONAL TITLE INSURANCE COMPANY, TITLE NO. 2013-80887, REVISED TO FEBRUARY 13, 2015 AND IS SUBJECT TO THE CONDITIONS AND RESTRICTIONS LISTED THEREON THE TITLE REPORT AND SEVERAL NOTED UNRECORDED DOCUMENTS WERE SUPPLIED BY E.I. DU PONT DE NEMOURS AND COMPANY.

3. EXISTING CONDITIONS ARE ALSO BASED IN PART ON A FORMER SURVEY OF THE ENTIRE TRACT PERFORMED FOR E.I. DU PONT DE NEMOURS AND COMPANY DATED 12/15/2000 PREPARED BY CONSULTING ENGINEERING SERVICES, FOUND MONUMENTATION, PHYSICAL EVIDENCE, DEEDS OF RECORD, AND TAX MAP INFORMATION.

4. EXISTING BUILDINGS AT THE SITE NOT DESIGNATED "TO REMAIN" HAVE BEEN DEMOLISHED TO FOUNDATION LEVEL AFTER SITE SURVEY WAS PERFORMED.

5. BUILDING SURFACE AND SUBSURFACE IMPROVEMENTS ON OR ADJACENT TO THE SITE ARE NOT NECESSARILY SHOWN.

6. THE LOCATIONS OF UNDERGROUND UTILITIES MAY VARY FROM THE LOCATIONS ILLUSTRATED. THE UTILITIES WERE MAPPED FROM RECORD PLANS PROVIDED BY DU PONT AND ORIENTED TO PHYSICAL FEATURES ILLUSTRATED ON THE RECORD PLANS. SITE IMPROVEMENTS/INFRASTRUCTURE MAY NOT BE SHOWN BECAUSE OF LACK OF DEFINED RECORDS. A DETAILED SUBSURFACE INVESTIGATION TO VERIFY PRESENCE OF UNDERGROUND STRUCTURES/UTILITIES MUST BE PERFORMED PRIOR TO ANY EXCAVATION OR CONSTRUCTION.

7. THE VERTICAL DATUM IS BASED UPON NORTH AMERICAN VERTICAL DATUM OF 1988 (NAVD88). THE HIGH TIDE LINE (HTL) IS DEFINED AS MEAN HIGHER HIGH WATER WHICH IS ELEV +3.14 FT.

REPAUNO DESIGN DATUM - NAVD88	
HIGHEST OBSERVED WATER LEVEL *	7.14 FEET
HIGH TIDE LINE (HTL)	3.14 FEET
MEAN HIGH WATER (MHW)	2.77 FEET
MEAN SEA LEVEL (MSL)	0.13 FEET
NORTH AMERICAN VERTICAL DATUM (NAVD88)	0.00 FEET
MEAN TIDE LEVEL (MTL)	-0.02 FEET
MEAN LOW WATER (MLW)	-2.82 FEET
MEAN LOWER LOW WATER (MLLW)	-3.00 FEET
LOWEST OBSERVED WATER LEVEL	-6.52 FEET

* THE "HIGHEST OBSERVED WATER LEVEL" WAS RECORDED BY NOAA (NATIONAL OCEANIC AND ATMOSPHERIC ADMINISTRATION) ON OCTOBER 30, 2012 WHEN HURRICANE SANDY WAS CROSSING THE DELAWARE RIVER NEAR WILMINGTON, DE.

8. THE TOPOGRAPHIC SURVEY ILLUSTRATED IN THIS PLAN SET WAS PERFORMED DURING A TIME PERIOD WHERE THE GROUND WAS OBSCURED IN LARGE PART BY VEGETATIVE COVER. THE FINAL TOPOGRAPHY WAS DEVELOPED FROM A COMBINATION OF DATA SOURCES INCLUDING NEW LIDAR DATA ACQUIRED IN JULY, 2014; AERIAL PHOTOGRAPHY DATED JULY, 2014; NEW ORTHOPHOTOGRAPHY DATED JULY, 2014; NJ STATE LIDAR DATA OBTAINED IN THE SPRING OF 2007; NJ STATE ORTHOPHOTOGRAPHY (2012); PLANIMETRIC DETAIL ON A SURVEY BY CONSULTING ENGINEERING SERVICES, DATED DECEMBER 15, 2000. THIS TOPOGRAPHIC SURVEY SHOULD NOT BE USED FOR FINAL DESIGN OR EARTHWORK CALCULATIONS WITHOUT FIELD VERIFICATION OF THE ELEVATIONS.

9. THE HYDROGRAPHIC SURVEY ILLUSTRATED IN THIS PLAN SET WAS PERFORMED IN DECEMBER 2014 AND UPDATED IN NOVEMBER 2018 BY GAHAGAN & BRYANT ASSOCIATES, INC.

10. HIGH TIDE LINE SHOWN ON PLANS IS ELEV +3.14 FT, EXCEPT WHERE THERE IS AN EXISTING BULKHEAD, PIER OR TIDE GATE. THIS LINE DEFINES THE MEAN HIGHER HIGH WATER LINE AND LIMIT OF WATERS OF THE U.S (WOTUS).

11. SURVEY BASED ON THE NEW JERSEY STATE PLANE COORDINATE SYSTEM NAD 1983. THE COORDINATES SHOWN HEREON WERE DERIVED FROM A VIRTUAL REFERENCE STATION (VRS) NETWORK (KEYNET GPS) USING TRIMBLE'S VRS NET APP SOFTWARE.

INDEX OF DRAWINGS

APPLICATION BY:
DELAWARE RIVER PARTNERS LLC
200 N REPAUNO AVENUE
GIBBSTOWN, NEW JERSEY 08027

ENGINEER:
moffatt & nichol

DRP GIBBSTOWN
LOGISTICS CENTER
DOCK 2

PROJECT LOCATION:
DELAWARE RIVER
GIBBSTOWN, GREENWICH TOWNSHIP, NEW JERSEY

DATE: FEBRUARY 21, 2019

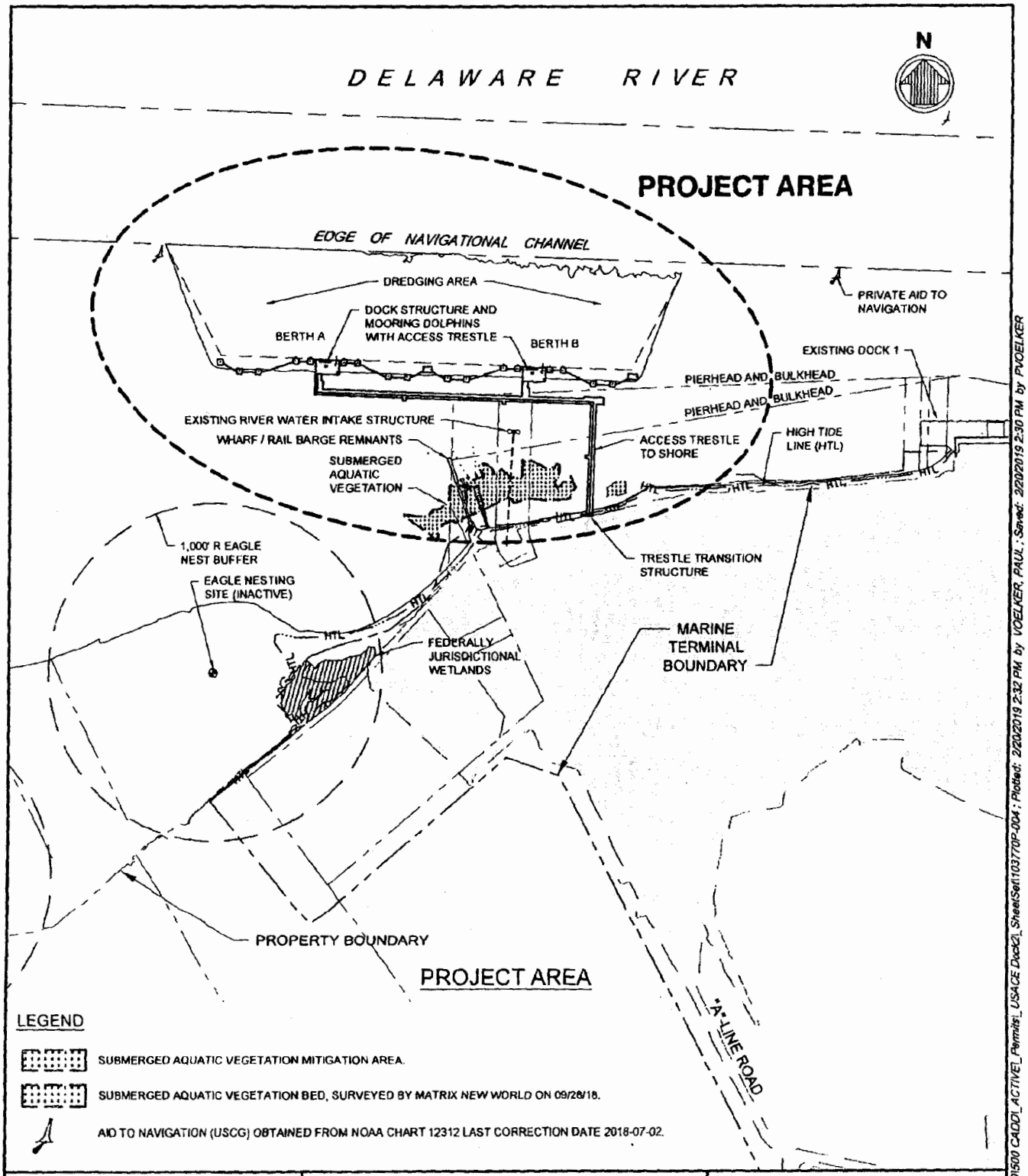

APPLICATION BY:
DELAWARE RIVER PARTNERS LLC
200 N REPAUNO AVENUE
GIBBSTOWN, NEW JERSEY 08027

ENGINEER:
moffatt & nichol

DRP GIBBSTOWN
LOGISTICS CENTER
DOCK 2

PROJECT LOCATION:
DELAWARE RIVER
GIBBSTOWN, GREENWICH TOWNSHIP, NEW JERSEY

400' 0' 400' 800'
SCALE: 1"=800'

DATE: FEBRUARY 21, 2019

SHEET 04 OF 20

File: Q:\BA\10377 DRP Energy FD\500 CADD_ACTIVE_Permits_USACE Dock2_SheetSet\103770P-004 ; Plotted: 2/20/2019 2:32 PM by VOELKER, PAUL ; Saved: 2/20/2019 2:30 PM by PVOELKER

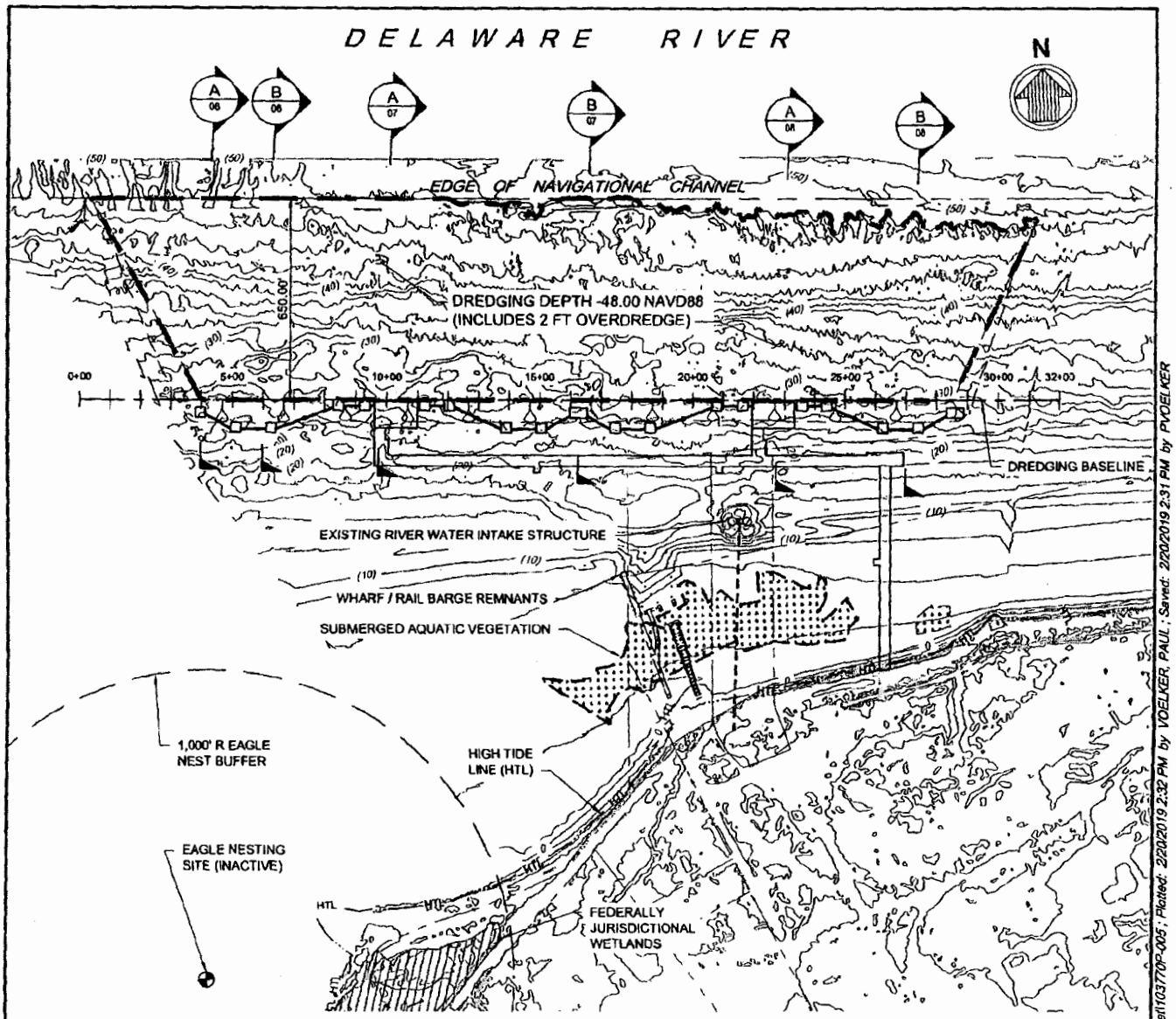

PLAN - DREDGING

LEGEND

- NEW DREDGING AREA (39.56 AC).
- SUBMERGED AQUATIC VEGETATION MITIGATION AREA.
- SUBMERGED AQUATIC VEGETATION BED, SURVEYED BY MATRIX NEW WORLD ON 09/28/18.
- AID TO NAVIGATION (USCG) OBTAINED FROM NOAA CHART 12312 LAST CORRECTION DATE 2018-07-02.

NOTES:

1. DREDGING AREA MEASURED TO TOE OF SLOPE.
2. DREDGED SLOPE IS 3:1.

APPLICATION BY:
DELAWARE RIVER PARTNERS LLC
200 N REPAUNO AVENUE
GIBBSTOWN, NEW JERSEY 08027

ENGINEER:
moffatt & nichol

DRP GIBBSTOWN
LOGISTICS CENTER
DOCK 2

PROJECT LOCATION:
DELAWARE RIVER
GIBBSTOWN, GREENWICH TOWNSHIP, NEW JERSEY

500' 0' 500' 1000'
SCALE: 1"=500'

DATE: FEBRUARY 21, 2019

SHEET 05 OF 20

File: C:\BA\10377 DRP Energy FD\500 CADD_ACTIVE_Permits_USACE Dock2_SheetSet\103770P-005 ; Plotted: 2/20/2019 2:32 PM by VOELKER, PAUL ; Saved: 2/20/2019 2:31 PM by PVOELKER

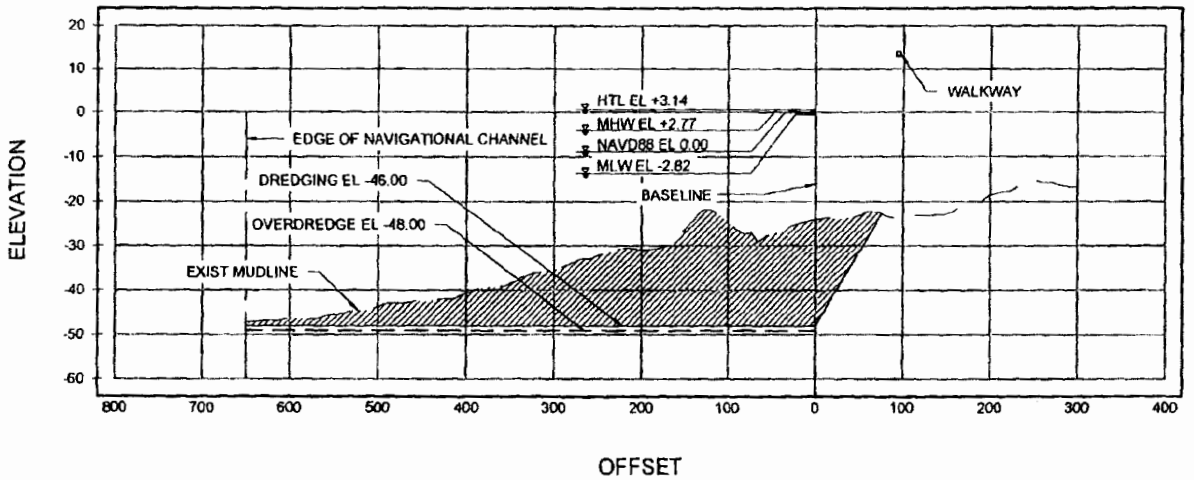

B / 05 SECTION - DREDGING @ STA 6+00
SCALE: 1"=200' H / 1"=40' V

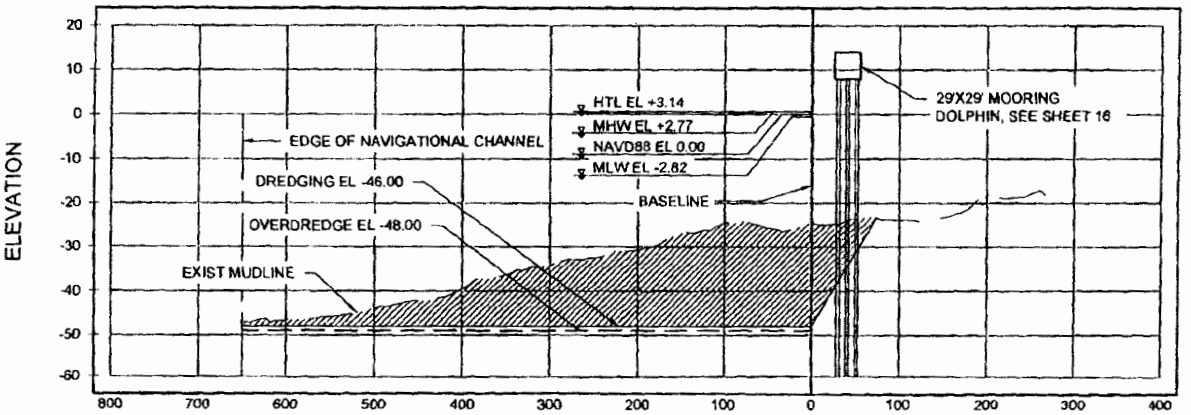

NOTE:
DREDGED SLOPE IS 3:1.

A / 05 SECTION - DREDGING @ STA 4+00
SCALE: 1"=200' H / 1"=40' V

SECTIONS - DREDGING SHEET 1 OF 3

APPLICATION BY:
DELAWARE RIVER PARTNERS LLC
200 N REPAUNO AVENUE
GIBBSTOWN, NEW JERSEY 08027

ENGINEER:
moffatt & nichol

DRP GIBBSTOWN
LOGISTICS CENTER
DOCK 2

PROJECT LOCATION:
DELAWARE RIVER
GIBBSTOWN, GREENWICH TOWNSHIP, NEW JERSEY

200' 0' 200' 400'
SCALE: 1"=200'
40' 0' 40' 80'
SCALE: 1"=40'

DATE: FEBRUARY 21, 2019

SHEET 06 OF 20

File: Q:\BA\10377 DRP Energy FD\500 CADD_ACTIVE_Permits_USACE Dock2_SheetSet\103770P-006 ; Plotted: 2/20/2019 2:08 PM by VOELKER, PAUL ; Saved: 2/20/2019 10:41 AM by PVOELKER

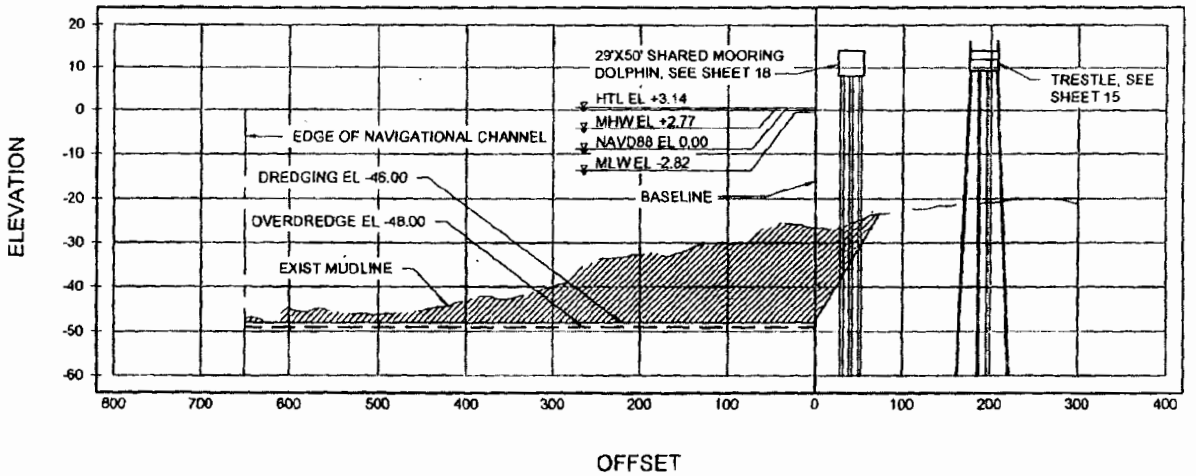

B / 05 SECTION - DREDGING @ STA 16+25
SCALE: 1"=200' H / 1"=40' V

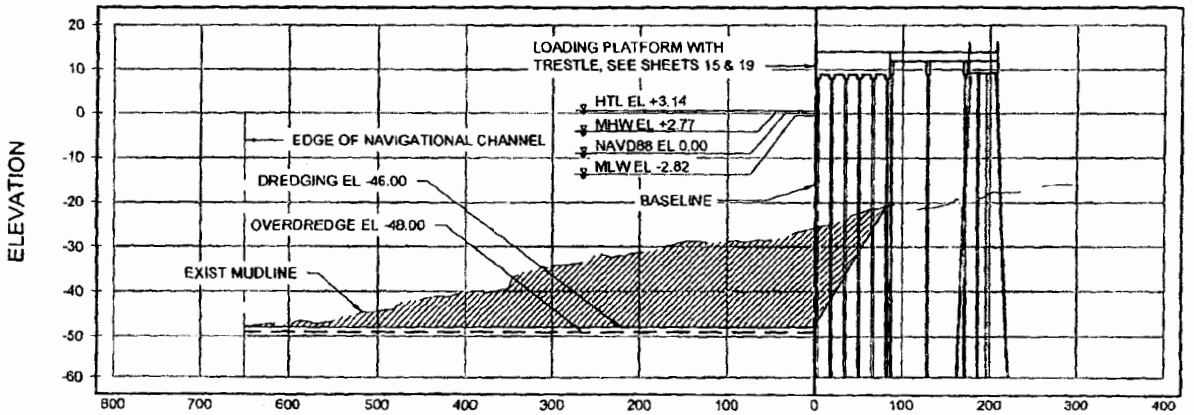

NOTE:
DREDGED SLOPE IS 3:1.

A / 05 SECTON - DREDGING @ STA 9+75
SCALE: 1"=200'H / 1"=40' V

SECTIONS - DREDGING SHEET 2 OF 3

APPLICATION BY:
DELAWARE RIVER PARTNERS LLC
200 N REPAUNO AVENUE
GIBBSTOWN, NEW JERSEY 08027

ENGINEER:
moffatt & nichol

DRP GIBBSTOWN
LOGISTICS CENTER
DOCK 2

PROJECT LOCATION:
DELAWARE RIVER
GIBBSTOWN, GREENWICH TOWNSHIP, NEW JERSEY

200' 0' 200' 400'
SCALE: 1"=200'
40' 0' 40' 80'
SCALE: 1"=40'
DATE: FEBRUARY 21, 2019

SHEET 07 OF 20

File: G:\BA110377 DRP Energy FD\500 CADD_ACTIVE_Permits_USACE Dock2_Sheets\an103770P-007 ; Plotted: 2/20/2019 2:08 PM by VOELKER, PAUL ; Saved: 2/20/2019 10:41 AM by PVOELKER

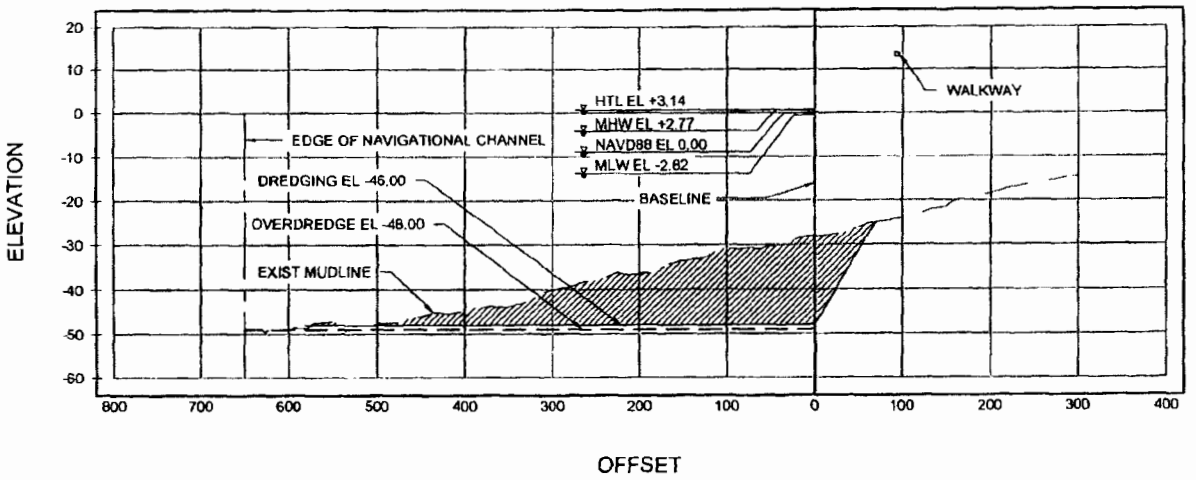

B / 05 SECTION - DREDGING STA 27+00
SCALE: 1"=200' H / 1"=40' V

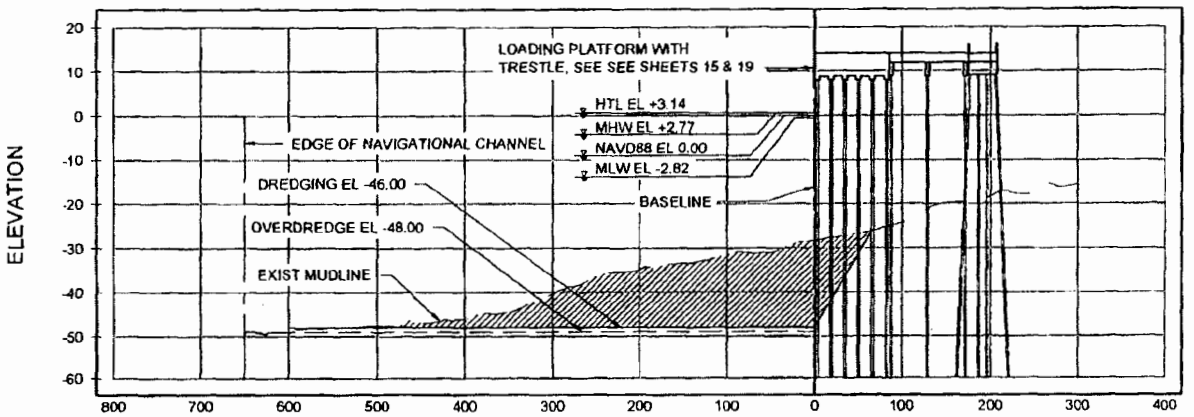

NOTE:
DREDGED SLOPE IS 3:1.

A / 05 SECTION - DREDGING @ STA 22+75
SCALE: 1"=200' H / 1"=40' V

SECTIONS - DREDGING SHEET 3 OF 3

APPLICATION BY:
DELAWARE RIVER PARTNERS LLC
200 N REPAUNO AVENUE
GIBBSTOWN, NEW JERSEY 08027

ENGINEER:
moffatt & nichol

DRP GIBBSTOWN
LOGISTICS CENTER
DOCK 2

PROJECT LOCATION:
DELAWARE RIVER
GIBBSTOWN, GREENWICH TOWNSHIP, NEW JERSEY

200' 0' 200' 400'
SCALE: 1"=200'
40' 0' 40' 80'
SCALE: 1"=40'

DATE: FEBRUARY 21, 2019

SHEET 08 OF 20

File: Q:\BA\110377 DRP Energy FD\500 CADD_ACTIVE_Permits_USACE Dock2_Sheet Set\110377DP-008 ; Plotted: 2/20/2019 2:08 PM by VOELKER, PAUL ; Saved: 2/20/2019 10:41 AM by PVOELKER

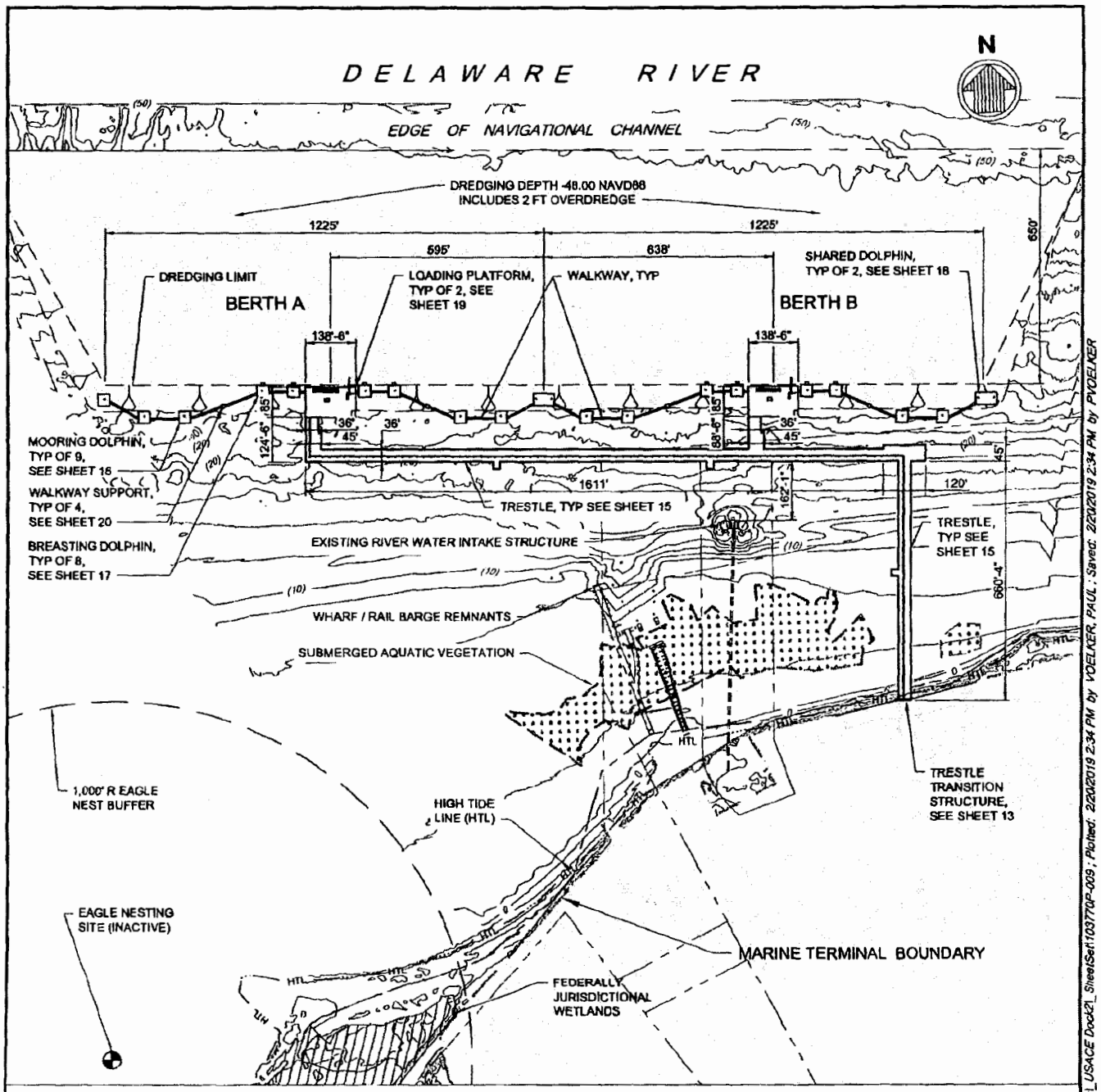

PLAN - GENERAL ARRANGEMENT BERTH A AND BERTH B

SUBMERGED AQUATIC VEGETATION MITIGATION AREA.

SUBMERGED AQUATIC VEGETATION BED, SURVEYED BY MATRIX NEW WORLD ON 09/26/18.

AID TO NAVIGATION (USCG) OBTAINED FROM NOAA CHART 12312 LAST CORRECTION DATE 2018-07-02.

APPLICATION BY: DELAWARE RIVER PARTNERS LLC 200 N REPAUNO AVENUE GIBBSTOWN, NEW JERSEY 08027	DRP GIBBSTOWN LOGISTICS CENTER DOCK 2	200' 0' 200' 400' SCALE: 1"=400'
ENGINEER: moffatt & nichol	PROJECT LOCATION: DELAWARE RIVER GIBBSTOWN, GREENWICH TOWNSHIP, NEW JERSEY	DATE: FEBRUARY 21, 2019 SHEET 09 OF 20

File: Q:\BA\10377 DRP Energy FD\500 CADD_ACTIVE_Permits_USACE Dock2_Sheets\Set1\0377DP-009 ; Plotted: 2/20/2019 2:34 PM by VOELKER, PAUL ; Saved: 2/20/2019 2:34 PM by PVOELKER

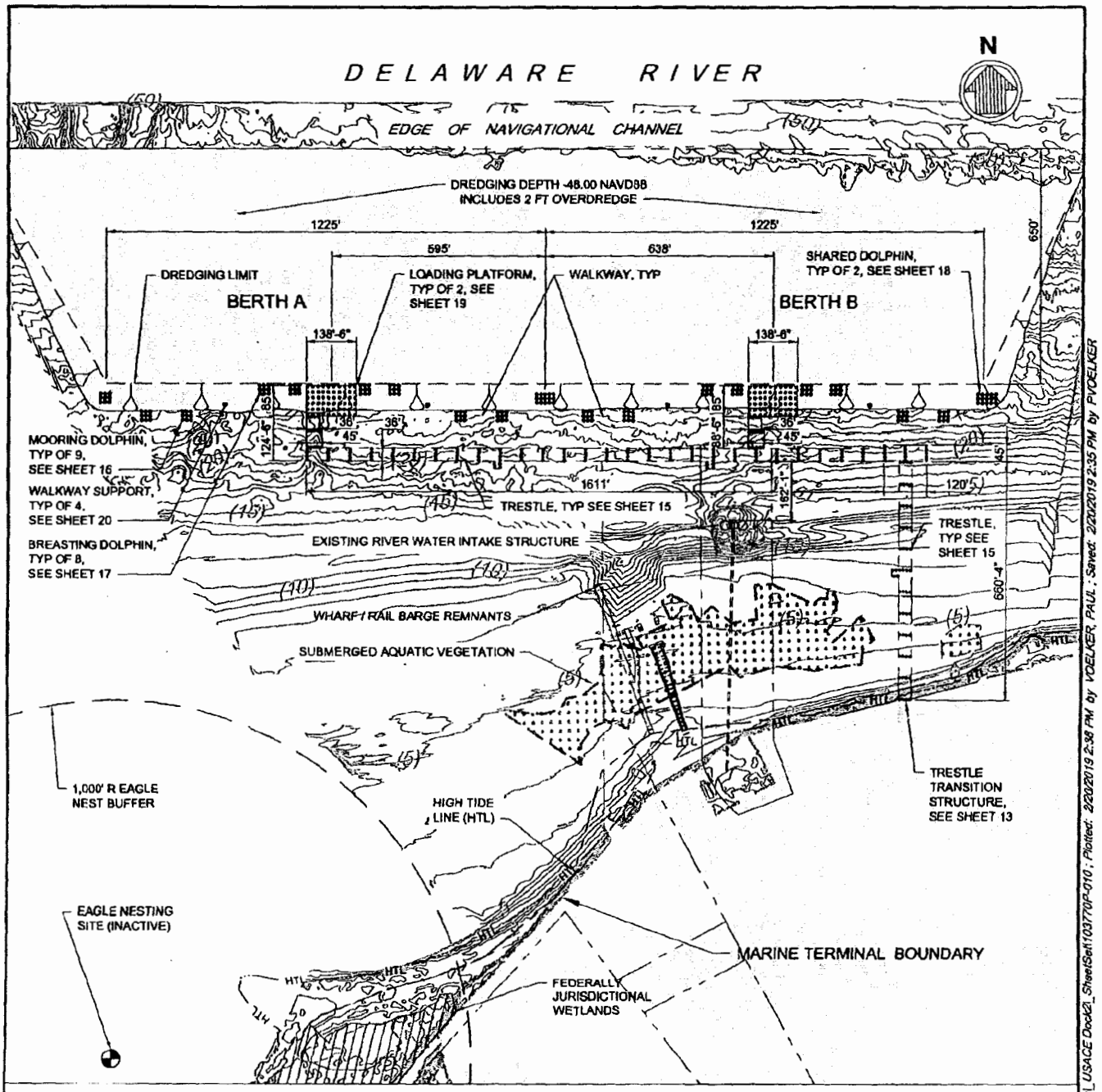

PLAN - PILE BERTH A AND BERTH B

SUBMERGED AQUATIC VEGETATION MITIGATION AREA.

SUBMERGED AQUATIC VEGETATION BED, SURVEYED BY MATRIX NEW WORLD ON 09/28/18.

AID TO NAVIGATION (USCG) OBTAINED FROM NOAA CHART 12312 LAST CORRECTION DATE 2018-07-02.

APPLICATION BY: DELAWARE RIVER PARTNERS LLC 200 N REPAUNO AVENUE GIBBSTOWN, NEW JERSEY 08027 ENGINEER: moffatt & nichol	DRP GIBBSTOWN LOGISTICS CENTER DOCK 2 PROJECT LOCATION: DELAWARE RIVER GIBBSTOWN, GREENWICH TOWNSHIP, NEW JERSEY	200' 0' 200' 400' SCALE: 1"=400' DATE: FEBRUARY 21, 2019 SHEET 10 OF 20

File: Q:\BA\10377 DRP Energy FD\500 CADD_ACTIVE_Permits_USACE Dock2_SheetSet\10377\P-010 ; Plotted: 2/20/2019 2:38 PM by VOELKER, PAUL ; Saved: 2/20/2019 2:35 PM by PVOELKER

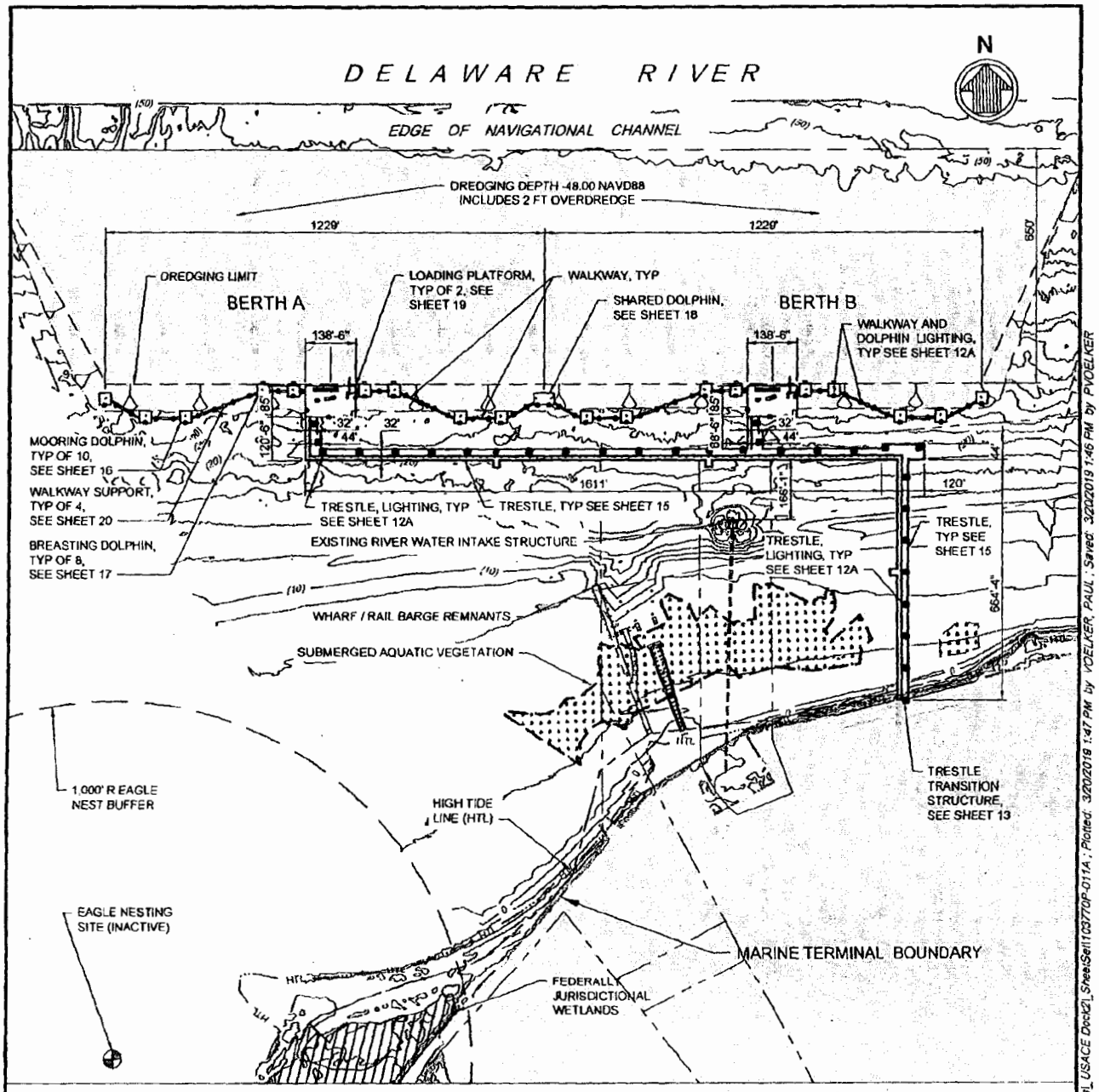

PLAN - LIGHTING GENERAL ARRANGEMENT BERTH A AND BERTH B

SUBMERGED AQUATIC VEGETATION MITIGATION AREA.

SUBMERGED AQUATIC VEGETATION BED, SURVEYED BY MATRIX NEW WORLD ON 09/28/18.

AID TO NAVIGATION (USCG) OBTAINED FROM NOAA CHART 12312 LAST CORRECTION DATE 2018-07-02.

APPLICATION BY: DELAWARE RIVER PARTNERS LLC 200 N REPAUNO AVENUE GIBBSTOWN, NEW JERSEY 08027	DRP GIBBSTOWN LOGISTICS CENTER DOCK 2	200' 0' 200' 400' SCALE: 1"=400'
ENGINEER: moffatt & nichol	PROJECT LOCATION: DELAWARE RIVER GIBBSTOWN, GREENWICH TOWNSHIP, NEW JERSEY	DATE: MARCH 20, 2019 SHEET 11A OF 20

File: Q:\BA110377 DRP Energy FD\500 CADD_ACTIVE_Permits_USACE Dock2_Sheets\Sell103770P-011A ; Plotted: 3/20/2019 1:47 PM by VOELKER, PAUL ; Saved: 3/20/2019 1:46 PM by PVOELKER

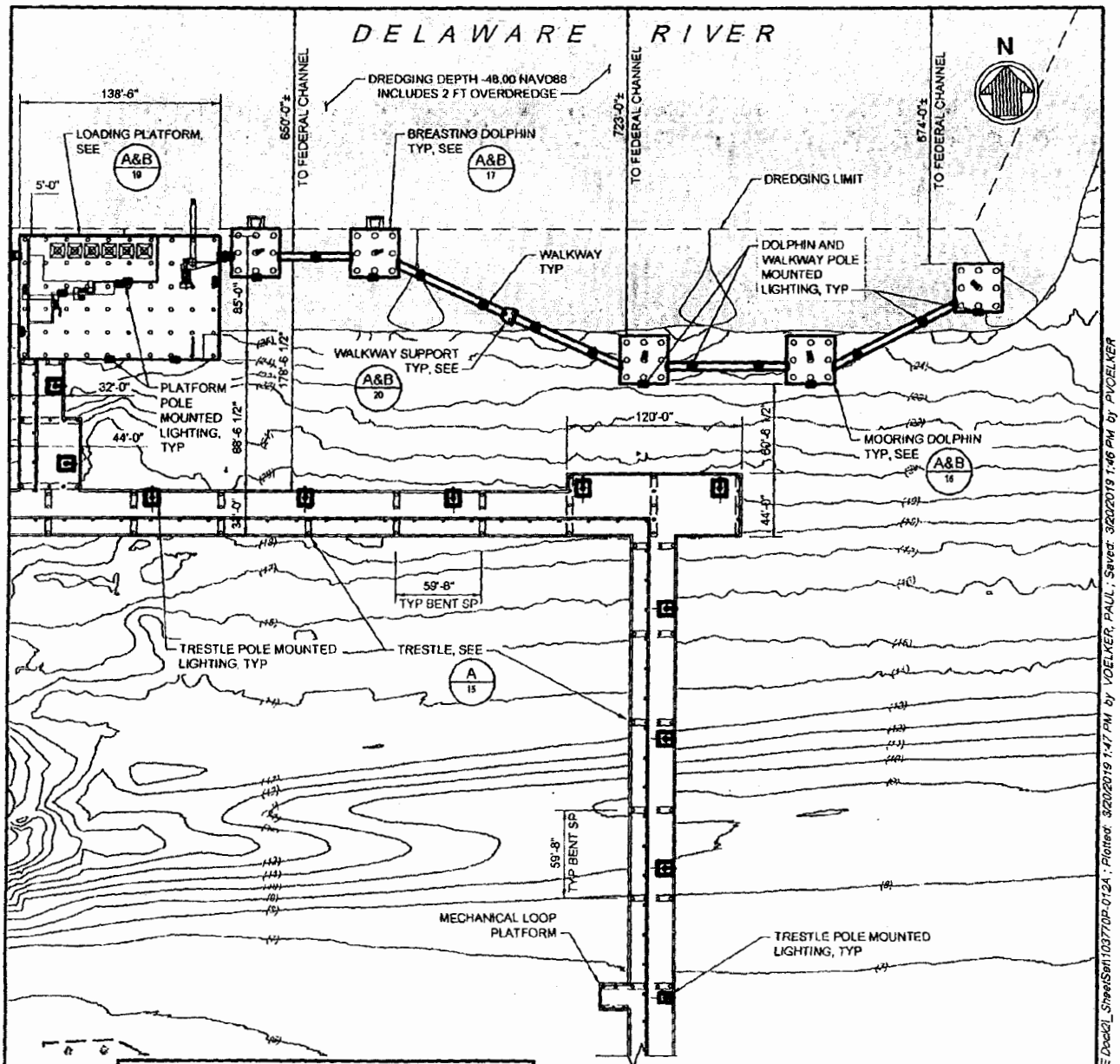

LUMINAIRE SCHEDULE

SYMBOL	QTY	LABEL	ARRANGEMENT
	34	LED FLOOD LIGHT ON POLE, CLASS 1 DIV 2	SINGLE
	27	LED ROADWAY ON POLE	SINGLE
	3	LED ROADWAY ON POLE	SINGLE
	40	LED PENDANT ON STANCHION, CLASS 1 DIV 2	SINGLE

PLAN - ENLARGED LIGHTING
BERTH A AND BERTH B

APPLICATION BY:
DELAWARE RIVER PARTNERS LLC
200 N REPAUNO AVENUE
GIBBSTOWN, NEW JERSEY 08027

ENGINEER:
moffatt & nichol

DRP GIBBSTOWN
LOGISTICS CENTER
DOCK 2

PROJECT LOCATION:
DELAWARE RIVER
GIBBSTOWN, GREENWICH TOWNSHIP, NEW JERSEY

100' 0' 100' 200'
SCALE: 1"=100'

DATE: MARCH 20, 2019

SHEET 12A OF 20

File: O:\BA\10377 DRP Energy, FD\500 CADD_ACTIVE_Permits_USACE Dock2_Sheets\Set1\10377DP-012A ; Plotted: 3/20/2019 1:47 PM by VOELKER, PAUL ; Saved: 3/20/2019 1:46 PM by PVOELKER

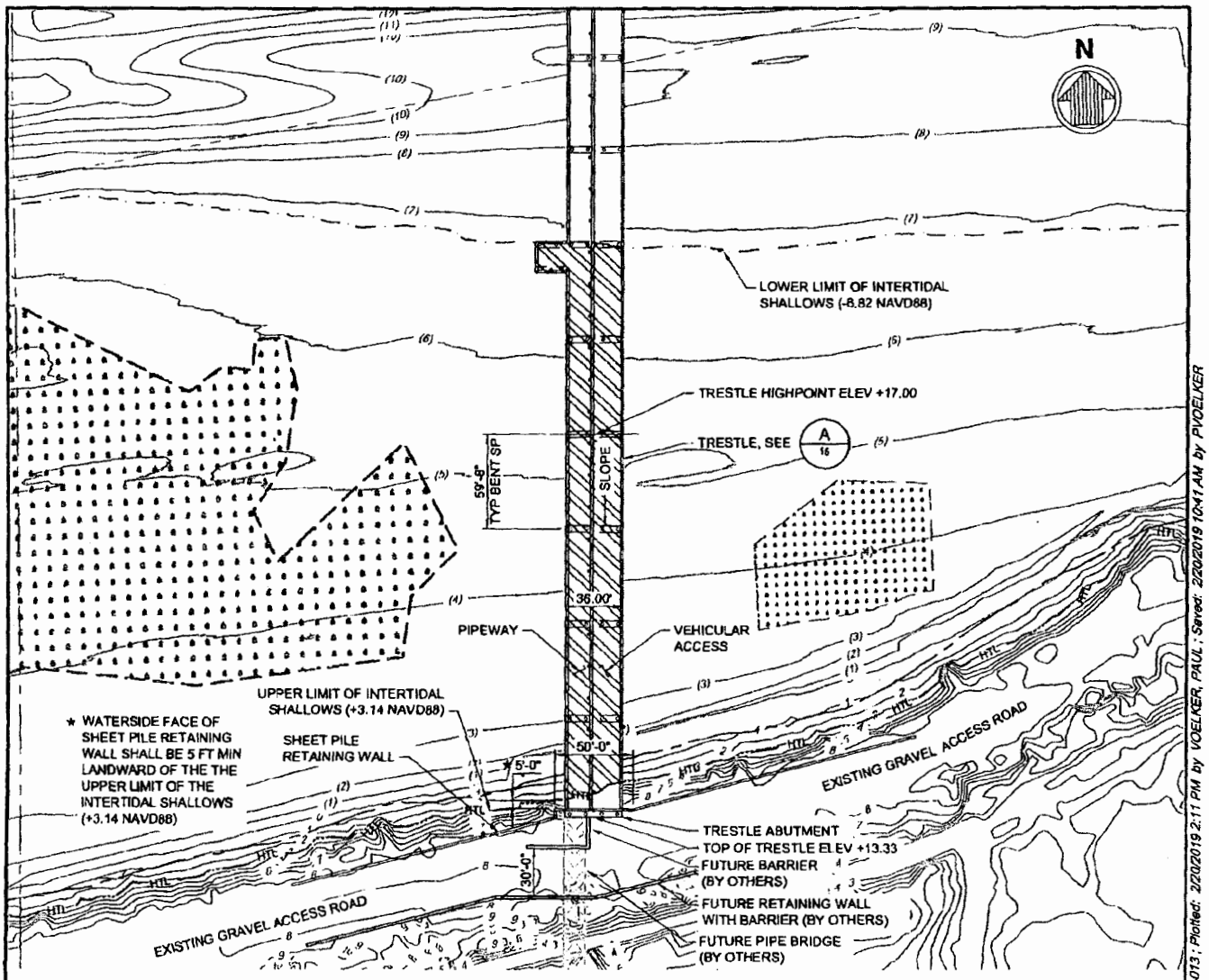

PLAN - LANDSIDE TRANSITION
BERTH A AND BERTH B

LEGEND

- AREA OF TRESTLE IN INTERTIDAL/SUBTIDAL SHALLOWS (0.30 AC)
- SUBMERGED AQUATIC VEGETATION MITIGATION AREA
- SUBMERGED AQUATIC VEGETATION BED, SURVEYED BY MATRIX NEW WORLD ON 09/28/18.

APPLICATION BY: DELAWARE RIVER PARTNERS LLC 200 N REPAUNO AVENUE GIBBSTOWN, NEW JERSEY 08027	DRP GIBBSTOWN LOGISTICS CENTER DOCK 2	50' 0' 50' 100' SCALE: 1"=50'
ENGINEER: moffatt & nichol	PROJECT LOCATION: DELAWARE RIVER GIBBSTOWN, GREENWICH TOWNSHIP, NEW JERSEY	DATE: FEBRUARY 21, 2019 SHEET 13 OF 20

File: Q:\BA110377 DRP Energy FD1500 CADD_ACTIVE_Permits_USACE Dock2_Sheets\Set110377\P-013 ; Plotted: 2/20/2019 2:11 PM by VOELKER, PAUL ; Saved: 2/20/2019 10:41 AM by PVOELKER

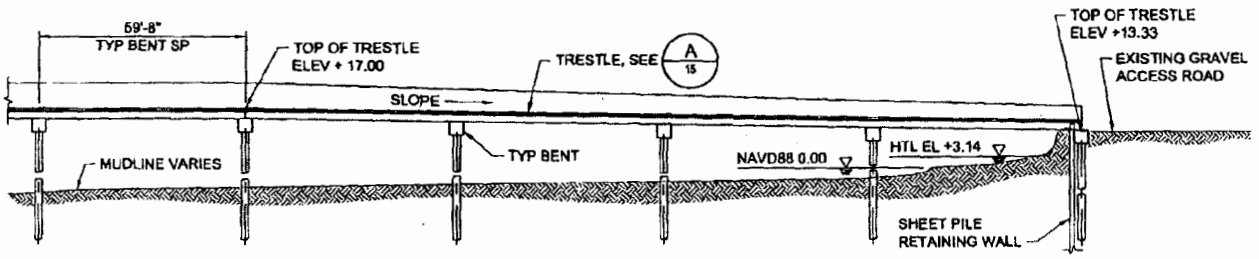

SECTION - LANDSIDE TRANSITION
BERTH A AND BERTH B

APPLICATION BY:
DELAWARE RIVER PARTNERS LLC
200 N REPAUNO AVENUE
GIBBSTOWN, NEW JERSEY 08027

ENGINEER:
moffatt & nichol

DRP GIBBSTOWN
LOGISTICS CENTER
DOCK 2

PROJECT LOCATION:
DELAWARE RIVER
GIBBSTOWN, GREENWICH TOWNSHIP, NEW JERSEY

50' 0' 50' 100'
SCALE: 1"=50'

DATE: FEBRUARY 21, 2019

SHEET 14 OF 20

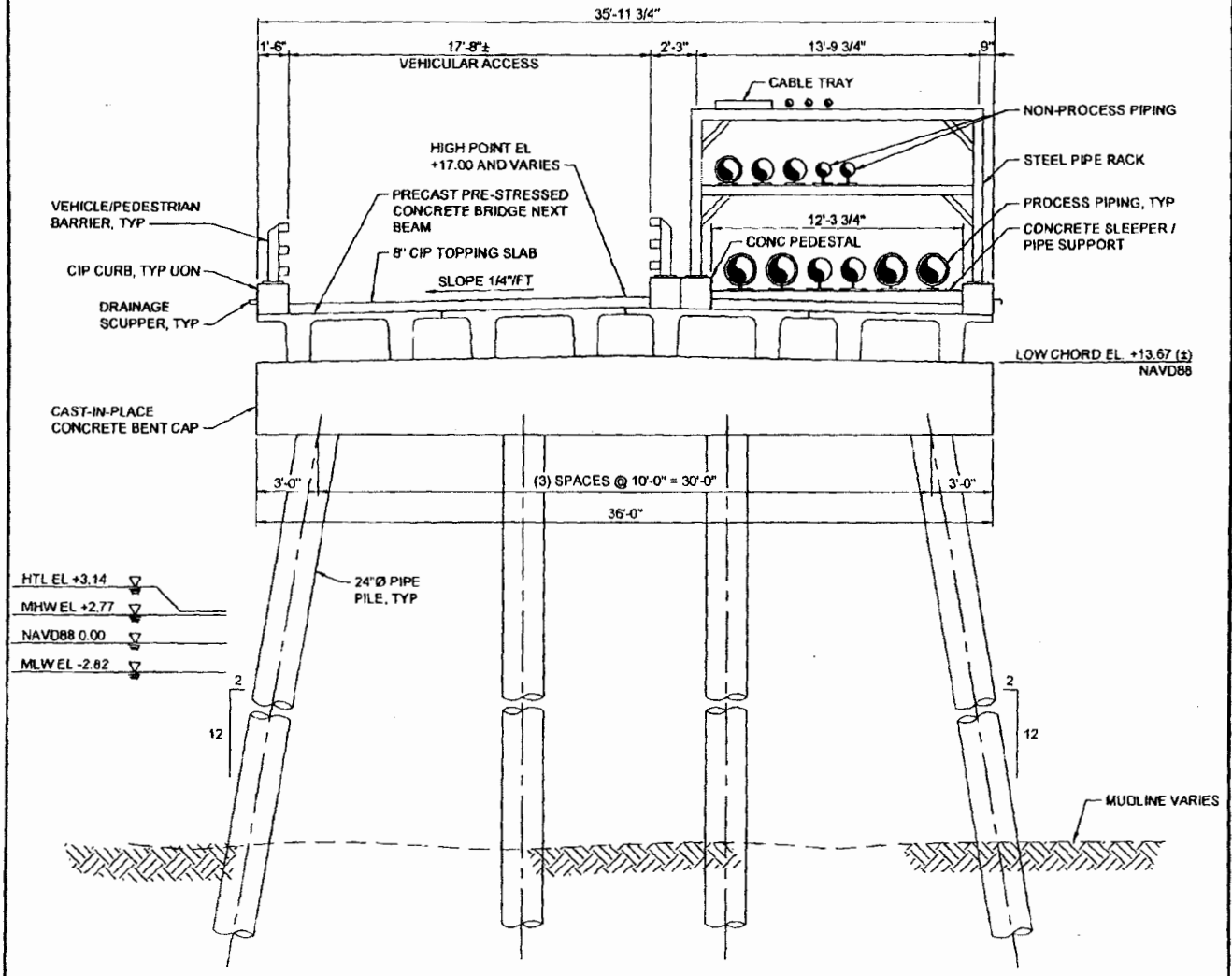

NOTE:

PILE BENTS SHALL BE SPACED 59'-8"±.

SECTION - TYPICAL TRESTLE

APPLICATION BY: DELAWARE RIVER PARTNERS LLC 200 N REPAUNO AVENUE GIBBSTOWN, NEW JERSEY 08027	DRP GIBBSTOWN LOGISTICS CENTER DOCK 2	
ENGINEER: moffatt & nichol	PROJECT LOCATION: DELAWARE RIVER GIBBSTOWN, GREENWICH TOWNSHIP, NEW JERSEY	DATE: FEBRUARY 21, 2019 SHEET 15 OF 20

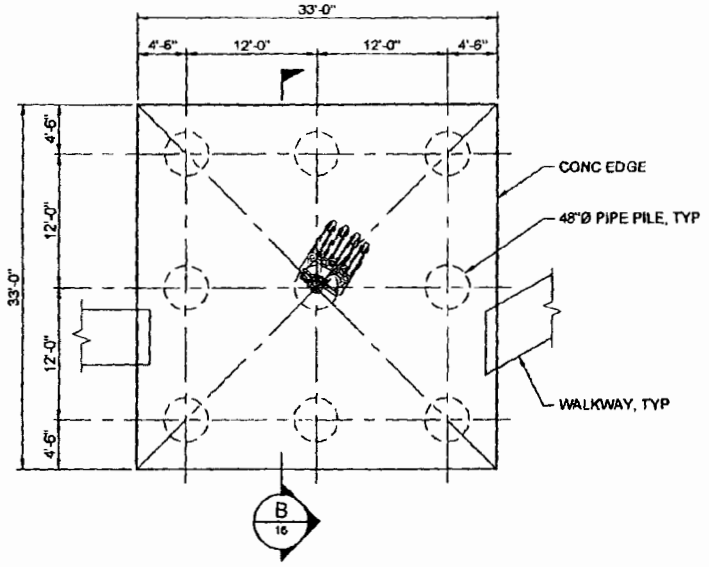

A 16 TOP PLAN - TYPICAL MOORING DOLPHIN
SCALE: 1/16"=1'-0"

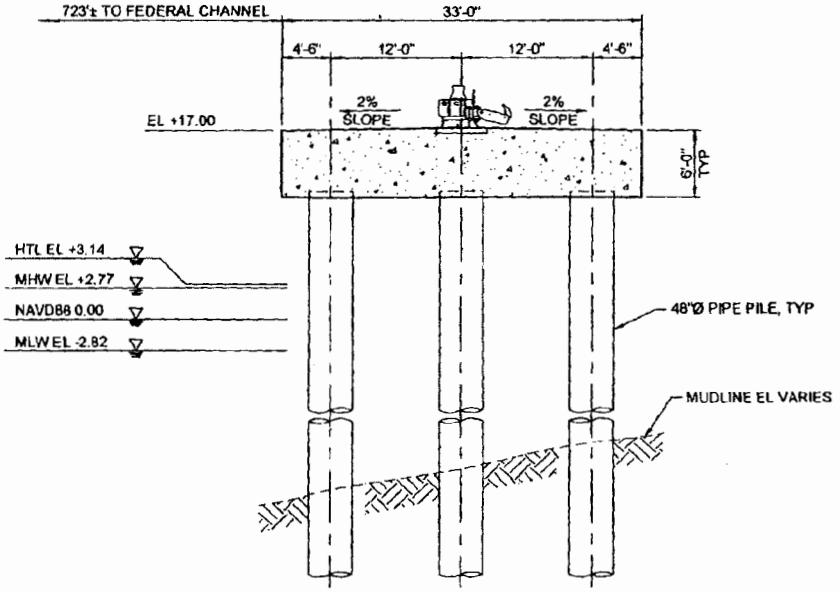

B 16 SECTION - TYPICAL MOORING DOLPHIN
SCALE: 1/16"=1'-0"

APPLICATION BY: DELAWARE RIVER PARTNERS LLC 200 N REPAUNO AVENUE GIBBSTOWN, NEW JERSEY 08027 ENGINEER: moffatt & nichol	DRP GIBBSTOWN LOGISTICS CENTER DOCK 2 PROJECT LOCATION: DELAWARE RIVER GIBBSTOWN, GREENWICH TOWNSHIP, NEW JERSEY	DATE: FEBRUARY 21, 2019 SHEET 16 OF 20

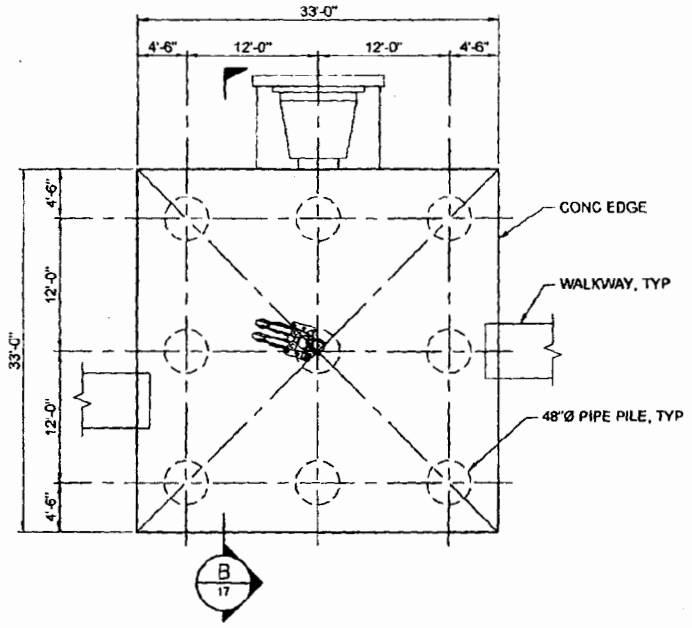

A 17 TOP PLAN - TYPICAL BREASTING DOLPHIN
SCALE: 1/16"=1'-0"

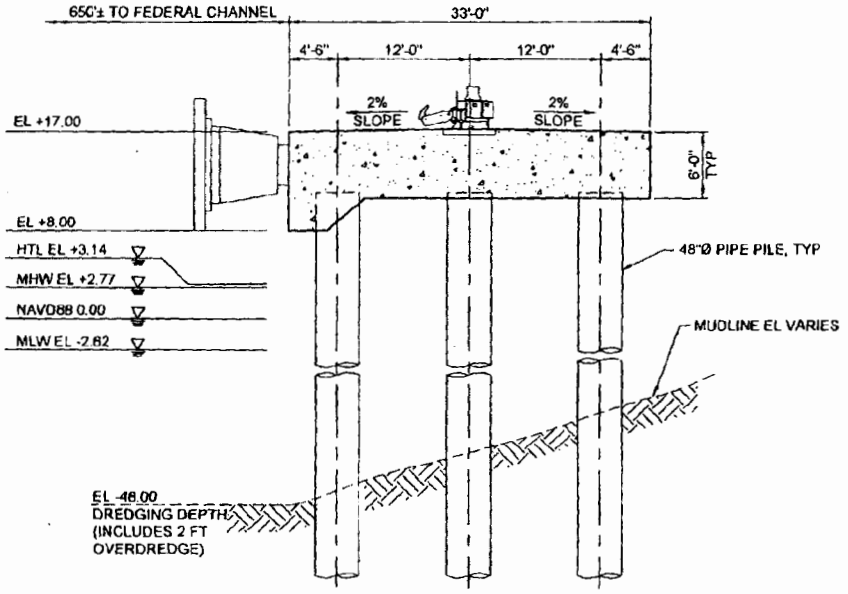

B 17 SECTION - TYPICAL BREASTING DOLPHIN
SCALE: 1/16"=1'-0"

APPLICATION BY: DELAWARE RIVER PARTNERS LLC 200 N REPAUNO AVENUE GIBBSTOWN, NEW JERSEY 08027 ENGINEER: moffatt & nichol	DRP GIBBSTOWN LOGISTICS CENTER DOCK 2 PROJECT LOCATION: DELAWARE RIVER GIBBSTOWN, GREENWICH TOWNSHIP, NEW JERSEY	DATE: FEBRUARY 21, 2019 SHEET 17 OF 20

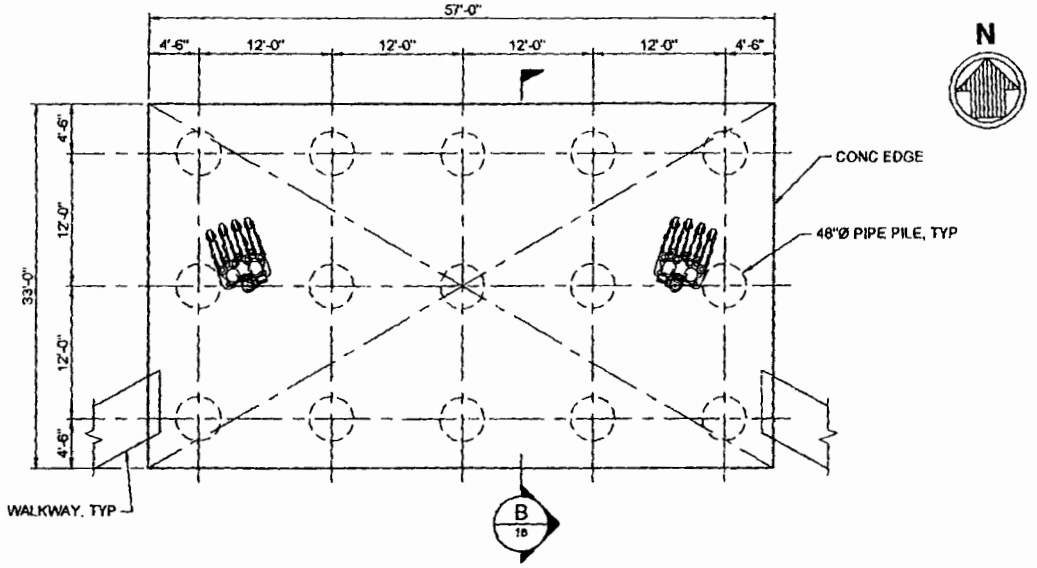

A TOP PLAN - TYPICAL SHARED DOLPHIN
SCALE: 1/16"=1'-0"

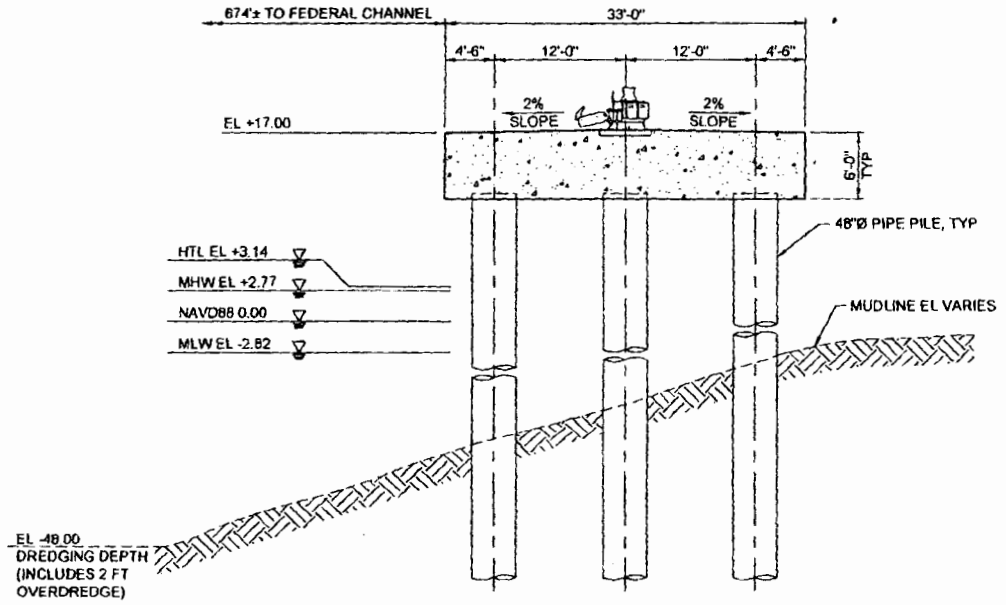

B SECTION - TYPICAL SHARED DOLPHIN
SCALE: 1/16"=1'-0"

APPLICATION BY: DELAWARE RIVER PARTNERS LLC 200 N REPAUNO AVENUE GIBBSTOWN, NEW JERSEY 08027	DRP GIBBSTOWN LOGISTICS CENTER DOCK 2	
ENGINEER: moffatt & nichol	PROJECT LOCATION: DELAWARE RIVER GIBBSTOWN, GREENWICH TOWNSHIP, NEW JERSEY	DATE: FEBRUARY 21, 2019 SHEET 18 OF 20

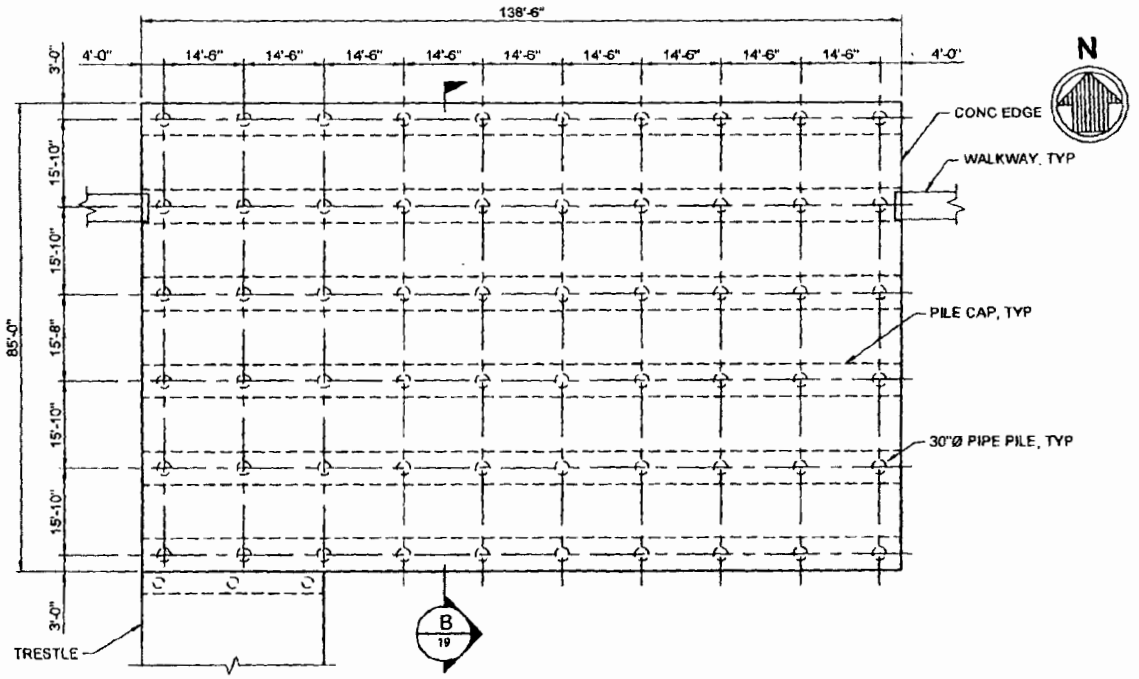

A 19 TOP PLAN - LOADING PLATFORM
SCALE: 1/32"=1'-0"

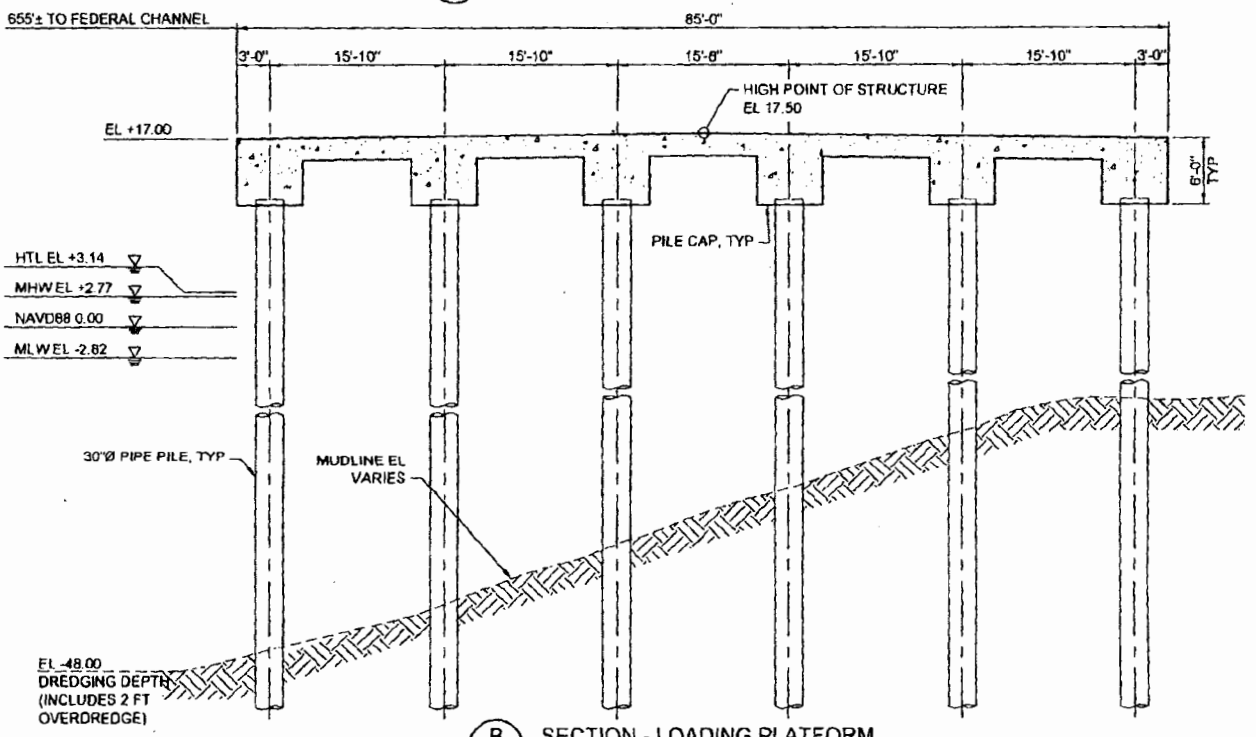

B 19 SECTION - LOADING PLATFORM
SCALE: 1/16"=1'-0"

APPLICATION BY:
DELAWARE RIVER PARTNERS LLC
200 N REPAUNO AVENUE
GIBBSTOWN, NEW JERSEY 08027

ENGINEER:
moffatt & nichol

DRP GIBBSTOWN
LOGISTICS CENTER
DOCK 2

PROJECT LOCATION:
DELAWARE RIVER
GIBBSTOWN, GREENWICH TOWNSHIP, NEW JERSEY

DATE: FEBRUARY 21, 2019

SHEET 19 OF 20

File: Q:\BA110377 DRP Energy FD\500 CAD_ACTIVE_Permits_USACE Dock2_SheetSet\103770P-019 ; Plotted: 2/20/2019 2:12 PM by VOELKER, PAUL ; Saved: 2/20/2019 10:41 AM by MWILKINSON

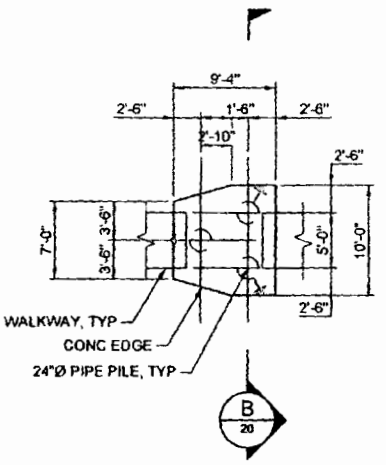

A 20 TOP PLAN - TYPICAL WALKWAY SUPPORT
SCALE: 1/16"=1'-0"

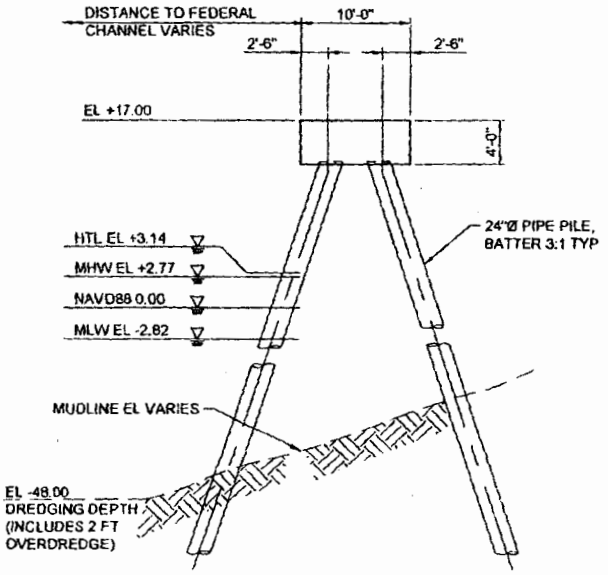

B 20 SECTION - TYPICAL WALKWAY SUPPORT
SCALE: 1/16"=1'-0"

APPLICATION BY: DELAWARE RIVER PARTNERS LLC 200 N REPAUNO AVENUE GIBBSTOWN, NEW JERSEY 08027 ENGINEER: moffatt & nichol	DRP GIBBSTOWN LOGISTICS CENTER DOCK 2 PROJECT LOCATION: DELAWARE RIVER GIBBSTOWN, GREENWICH TOWNSHIP, NEW JERSEY	DATE: FEBRUARY 21, 2019 SHEET 20 OF 20

Information withheld pursuant to FOIA Exemption 6

From: [redacted]
To: Andrew Kohout; Brian S. White; [redacted] Danny Laffoon; [redacted] David Sweanngen; [redacted] Heather Campbell; Jacqueline Holmes; James Martin; [redacted] Laura Kane; [redacted] PJ-10; PJ-10.1; PJ-10.2; Rich McGuire; [redacted] Shannon Jones; Terry Turpin; [redacted]; brogers@fortress.com; jdecker@velaw.com; cterhune@velaw.com; Wilson, Anita (awilson@velaw.com); [redacted] Joel Ameson; [redacted]; Nils Nichols
Subject: Meeting: Fortress
Start: Thursday, September 07, 2017 10:00:00 AM
End: Thursday, September 07, 2017 10:50:00 AM
Location: 61-06 CR

Please mark your calendar and confirm your attendance to meet with representatives from Fortress to discuss whether FERC would assert jurisdiction over a project that will consist of the following elements: installation of facilities to liquefy natural gas at the wellhead, transportation of LNG by rail or by truck to a private port facility being developed by another subsidiary of Fortress at the DuPont Rapauno site in Greenwich Township, New Jersey, loading the LNG onto tankers for export.

Attendees:

Brit Rogers

John Decker

Christopher Terhune
Anita Wilson

From: Celeste Miller on behalf of MediaDL
To: NewsDL
Subject: July 8 news clips
Date: Monday, July 08, 2019 8:27:24 AM

DAILY
NEWS CLIPS
OFFICE OF EXTERNAL AFFAIRS
FEDERAL ENERGY REGULATORY COMMISSION

Monday, July 8, 2019 Visit our News Clips website

TOP STORIES

Coal bankruptcy reorganizations number at least 6 under Trump despite sector aid

ELECTRIC

New Cal-ISO rules will prevent sudden, massive renewable outages
Grid chief: Operators pulling 'rabbits' to keep lights on
Study: US could triple existing demand-response levels
Executive Q&A
Delta-Montrose files restraining order against Tri-State, as others examine buy out costs

GAS/LNG/OIL PIPELINES

Mountain Valley 'quick take' fight heads to Supreme Court
Ahead of MVP start, Equitrans seeks to put EEP project into service
FERC presses Atlantic Coast developer to answer critics
Group says LNG growth worse than coal for climate; industry calls report flawed
McDermott/Chiyoda JV wins incentive to complete US Cameron LNG project on time
Sempra inks new construction contract on delayed LNG terminal
Dissident shareholders gain momentum in effort to take control of EQT
Rural Macomb County residents plead for better safety from proposed gas compressor
As Activists Push Democratic Climate Debate, DNC Donors Profit from Oil, Gas

CONGRESS

Senators to review global LNG export landscape
Panel to gauge grid hacking defenses
Committees to advance technology, storage bills
Momentum grows on infrastructure, FAST Act
Budget talks reaching decisive moment

OTHER AGENCIES

White House climate guidance could spark NEPA battles

STATES

Colorado legislators, electric cooperative want Tri-State to put off move to federal oversight

Significant power market design changes needed to comply with N.Y. climate law: IPPNY

Top Stories

S&P Global
July 5, 2019

Coal bankruptcy reorganizations number at least 6 under Trump despite sector aid

By Ellie Potter Market Intelligence

Despite efforts by the Trump administration to end and reverse the so-called Obama-era war on coal, at least six coal companies have filed for bankruptcy protection since he took office.

Since taking over the Oval Office in 2017, President Donald Trump and his administration have attempted to repeal the moratorium on federal coal leasing instated by his predecessor's administration and issued executive orders to promote coal export infrastructure. The U.S. Department of Energy is actively working to develop more efficient, modular so-called coal plants of the future to spur coal demand as well.

Among other efforts to relieve regulations on the industry, the administration proposed the Affordable Clean Energy rule, serving as a less environmentally stringent regulation than former President Barack Obama's Clean Power Plan, which was stayed by the U.S. Supreme Court.

At a coal conference shortly after Trump's inauguration, former Contura Energy Inc. CEO Kevin Crutchfield told attendees not to dwell on the past.

"As the national conversation changes, we must shift from survival mode to one of proactive collaboration," he said at the 2017 Coaltrans conference in Miami. "We must play a role in writing the next chapter of our future."

But despite the executive branch's efforts, the U.S. coal sector continues to struggle. Planned coal power plant retirements doubled from 2017 to 2018 and though the strong seaborne market benefited many domestic producers in 2018, prices in key markets slumped in early 2019 to a point where many miners are expected to struggle to compete.

Murray Energy Corp. CEO Robert Murray said in a late 2016 interview that the production decline at the time could not be reversed.

"This is permanent destruction by Obama and his Democrat supporters," he said.

Armstrong Coal Co. Inc. filed for Chapter 11 bankruptcy protection in November 2017, the first coal miner reorganization of Trump's presidency, citing market oversupply and low prices. It later sold many of its coal assets to a Murray Energy subsidiary in early 2018.

Westmoreland Coal Co. and its master limited partnership Westmoreland Resource Partners LP followed suit in October 2018 after years of attempts to delever its balance sheet. More than 70% of the entities' 2017 coal deliveries came from its minemouth operations, sites that exclusively serve a neighboring coal plant, with units slated to retire within the next decade.

In March, Westmoreland Coal transferred the bulk of its remaining assets to newly formed Westmoreland Mining LLC, a privately held company owned and operated by a group of its former creditors, after selling some of its other operations.

About a week after Westmoreland filed with a bankruptcy court, metallurgical coal miner Mission Coal Co. LLC also sought reorganization. The company had settled a legal dispute with a coal company owned by West Virginia Gov. Jim Justice's family just days before and had previously said the legal issues could result in bankruptcy. That company received court approval in April to emerge from bankruptcy reorganization and sell its coking coal assets to Murray Energy.

In early 2017, executives from two coal companies said Chapter 11 bankruptcy reorganization was bad for the overall industry because it allows miners to shed debt rather than be pushed out of the market. The reorganized companies are also usually more competitive post-bankruptcy than competitors that did not turn to the courts.

They foreshadowed Cloud Peak Energy Inc.'s fate. The pure-play Powder River Basin producer, one of the largest publicly traded companies to avoid the Obama-era wave of bankruptcies, filed for protection in May.

The thermal producer was plagued by issues at its mines, decreased domestic demand and lack of port infrastructure to reach export markets. It also missed debt payments leading up to its filing. Cloud Peak recently proposed holding an auction for its assets on Aug. 1.

Two more coal producers filed for bankruptcy protection within about two weeks of each other: Booth Energy Group subsidiary Cambrian Coal Corp. filed in mid-June while Revelation Energy LLC and its affiliate Blackjewel LLC filed together on July 1. Cambrian plans to sell off its assets.

Shortly after filing for bankruptcy protection, Blackjewel sent home all of the employees at its two Powder River Basin mines, leaving the sites unattended. Blackjewel is struggling to secure financing in the rapidly evolving case, but initially blamed its financial state on a "severe and unforeseen liquidity crisis."

This article was published by S&P Global Market Intelligence and not by S&P Global Ratings, which is a separately managed division of S&P Global

Return to Top

Electric

S&P Global Platts
July 3, 2019

New Cal-ISO rules will prevent sudden, massive renewable outages

By Kate Winston

The Federal Energy Regulatory Commission has approved rule changes that will help California Independent System Operator prevent events in which hundreds of megawatts of inverter-based resources like wind and solar needlessly trip offline and cause immediate reliability issues.

Cal-ISO has pointed to inverter-based generation problems as a threat to grid resilience. Meanwhile, the volume of renewable resources that use inverters has dramatically increased recently, and is expected to continue to grow to reach California ’s clean energy mandates.

Inverters change the frequency of power so that it can be put on the grid. Inverter-based

generators are programmed to trip offline when they detect a transmission fault that might harm them. The problem is that these inverters often trip when a grid fault is momentary and poses no risk of harm.

Loss events

Cal-ISO pointed to nine events since 2016 in which inverter-based problems resulted in a substantial loss of generation, including two events that cut more than 1,000 MW from the grid. For instance, an October 9, 2017, fire-related event led to the loss of 1,619 MW of generation, which represented a loss of 8.1% of Cal-ISO generation in just three minutes, Cal-ISO said in its proposal.

“These events require [Cal-ISO] operators to take immediate and significant actions, frequently out of the market, to maintain or restore system stability, frequency, and voltage,” Cal-ISO said.

The problem is particularly acute because of the rapid growth of inverter-based generation like wind and solar . Inverter-based generation has increased to account for 18,000 MW in Cal-ISO, and it is slated to continue to ramp up under the state’s goal to reach 100% clean energy by 2045.

FERC and the North American Electric Reliability Corp. have rules that require inverters to ride through certain faults. But there are still regulatory gaps, prompting Cal-ISO's proposed tariff changes to fix the issue.

FERC on Tuesday approved the new rules (ER19-1153), effective April 30, 2019. The commission also acknowledged Cal-ISO’s belief that more work may be needed going forward to respond to future grid topology and technology advancement.

New rules

The new rules require that asynchronous generators remain online for faults that will be cleared almost instantaneously. Among other changes, the rule also requires that when generators trip or cease to inject, they resynchronize quickly, going from no output to full output in one second or less.

And the new rules require generators to program their inverters to provide reactive support during transient low voltage conditions within a “no-trip” zone set in NERC standards.

Return to Top

EnergyWire
July 8, 2019
ELECTRICITY

Grid chief: Operators pulling 'rabbits' to keep lights on

Peter Behr, E&E News reporter

Stresses on parts of the power grid have operators scrambling for ways to keep the lights on.

In Texas, where backup power reserves are stretched to the limit, most engineers would conclude that "there's no way in hell they can keep the lights on," said Jim Robb, CEO of the North American Electric Reliability Corp. "And yet they do."

In New England, the head of the regional grid operator, Gordon van Welie, has needed a magician's touch to escape natural gas shortages for power plants, Robb added at a Federal Energy Regulatory Commission conference last month.

"Gordon up in New England constantly finds another rabbit to pull out of his hat to keep the lights on when any of us would look at that situation and say, 'It's got to break,'" Robb said.

California's power network, newly reliant on solar power and strained natural gas supplies, rounds out a trio of regional grids drawing attention from federal regulators over the challenges they face.

"We've got three really interesting hot spots in the country right now that are challenging everything that everybody in this room thinks about how an electric system should be operated," Robb told assembled grid experts at the June 27 meeting at FERC headquarters in Washington, D.C.

Robb said "there's something in the soup" in Texas and the other two stressed systems that offers food for thought, and he wasn't talking about chowder, gumbo or tortilla broth.

"One thing I would like us to do is dissect these three laboratories and understand what's really going on there that could challenge the rules of thumb that we carry around in our heads," he said.

Robb's comments offered takeaways for various sides in the debates over a clean energy future for the electric power sector.

He didn't endorse the coal industry's argument that clean energy ambitions should be slowed down to ensure secure power flows. But neither did Robb offer support to the most demanding goals of some clean energy advocates, who hope that a simple pairing of renewable energy and battery storage can be the next rabbit out of the hat for the U.S. power sector.

Today's utility-scale battery technology isn't up to that lift, Robb told reporters recently, putting the burden on "100% renewables" champions to document how that could work and what political price they'd be willing to pay.

Robb acknowledged that fast-paced transitions away from predictable coal-fired and nuclear power to variable renewable power are creating new issues that operators must learn how to manage in regions like California, Texas and New England.

"Each one of the utilities in those areas have been able to work their way through those tight spots," Mark Lauby, NERC's senior vice president and chief reliability officer, who testified alongside Robb at the FERC conference, said in an interview. "The question is, what are they doing? What are the operating procedures they've put in place?"

Lauby said NERC wants to work with those organizations to find their "secret sauce" and pass along the recipe to the rest of the industry.

Lone Star lessons

Texas, with its abundant wind power resources, edges close to power shortages when low wind conditions strain backup fossil fuel supplies, NERC warned in its 2018 Long Term Reliability Assessment, issued last December. The Electric Reliability Council of Texas (ERCOT), the grid manager for most of the state, is expected to stay below the anticipated reserve margin — the safety cushion of available backup generation capacity above forecast peak demand — through 2023, the period covered in NERC's analysis.

"We remain concerned about ERCOT resource adequacy as we enter the summer of 2019, but must acknowledge that the actions of ERCOT and performance of ERCOT-based generation in the past would indicate they have the tools needed to navigate this upcoming season," Robb and Lauby said in prepared testimony for the June 27 meeting.

ERCOT has called for a 13.75% reserve margin. But the figure this summer is estimated to

drop below 9%, primarily due to retirements of over 4,000 megawatts of coal and natural generation over the past two years and delays in bringing new plants online, according to NERC, whose favored safety margin is 15%.

That shortfall has prompted Robb's recent warnings about the Texas grid.

ERCOT has let spot prices for backup power rise very high when supplies are short, a key tool for keeping the lights on, Lauby pointed out. ERCOT also runs demand-response programs that encourage customers to reduce their electricity consumption in exchange for credit on electricity bills. "When prices start going up, some of the manufacturing plants and oil rigs will come off. That is one innovation," Lauby said.

If Texas allowed more high-voltage transmission lines to cross ERCOT's boundaries to tap into generation in nearby states, that would be another answer, albeit one currently found only in Energy Department researchers' futuristic studies.

Last July 19, ERCOT hit a record for power demand, and spot wholesale power prices peaked at over $2 per kilowatt-hour — more than 20 times above average. While there were scattered outages, no systemwide blackouts resulted.

This summer, even tighter conditions could catapult spot prices close to ERCOT's $9-per-kWh ceiling and leave Texas exposed to shortage emergencies, Texas grid planners warn.

The Count on Coal advocacy group says Texas is in a corner because it doesn't value the reliability of coal-fired power. Climate policy supporters respond that President Trump and the coal lobby aren't counting damage from coal's carbon emissions.

'Unacceptable' risks

California and New England have problems because many of the most direct solutions to their blackout threats remain out of reach, according to grid planners.

California needs more gas pipeline connections to ensure enough backup fuel for its gas-fired generation, particularly if the Aliso Canyon underground gas storage facility outside Los Angeles is lost for good, experts say. The facility has been operating at a restricted level since leaks were discovered in 2015.

Risk evaluations have uncovered "resource adequacy risks during nonpeak conditions" in Southern California and parts of Arizona starting in 2020 and increasing by 2022, NERC said.

In the absence of Aliso Canyon reserves, the loss of gas pipeline deliveries into Southern California from accidents, earthquakes or sabotage would cause a crisis in power supply, NERC has warned.

In that scenario, "the primary reliability risk occurs in the 4-6 hour period in the late afternoon and early evening when the sun is setting," said a study last year by the consulting firm Wood Mackenzie for the Western Electricity Coordinating Council, the reliability monitor west of the Rocky Mountains. In the extreme situation outlined, there wouldn't be enough gas to make up for a steep late-day drop in solar power output.

Supporters of a goal of achieving 100% renewable power supplies — without fallback support from gas or nuclear power — put faith in the widespread installation of battery power units to fill in behind renewable energy.

In California's shortage scenarios, the cost would be huge, according to the Wood Mackenzie analysts.

While battery storage could help meet load during sundown, a pipeline rupture in the U.S. Southwest would require investments "of a tremendous scale" to offset, they concluded.

"Nearly 15,000 megawatts of 4-hour battery storage, likely requiring capital investments on the scale of $12 to $18 billion, would be needed," the Wood Mackenzie consultants said.

They also found that California grid officials have opportunities to rewrite more grid rules, by requiring better information about the gas supply needs of generators, or designating some power plants as critical to grid reliability in emergencies and thus first in line for limited gas supplies.

On the other side of the country, NERC's long-term report noted that ISO New England, the region's grid operator, has flagged "unacceptable fuel security risks [that] could cause the system operator to deplete 10-minute operating reserves ... on numerous occasions and to possibly trigger load shedding (or rolling blackouts) during the winters of 2022-2023 and 2023-2024."

ISO New England's van Welie has pointed out that his organization has no authority to build anything to address the region's energy threats.

ISO New England is developing a workaround to offer power suppliers a premium to keep surplus fuel reserves on hand for a multiday "polar vortex" winter emergency, when gas heating demand would leave gas-fired power plants facing critically short supplies. That proposal will need FERC's OK to move forward.

Twitter: @PeteBehrEENews Email: pbehr@eenews.net

Return to Top

S&P Global
July 3, 2019

Study: US could triple existing demand-response levels

By Andrew Coffman Smith Market Intelligence

A new study identified nearly 200 GW of load-flexibility potential in the U.S. that could reduce system costs by more than $15 billion annually. That 200 GW amounts to 20% of the estimated national peak load for 2030 and more than triple the existing demand-response capabilities.

In the report, "The National Potential for Load Flexibility," economists for The Brattle Group assessed the value and market potential of emerging load flexibility across various regions in North America.

"The potential for load flexibility to facilitate the transition to a decarbonized power system is remarkable and currently overlooked," the study's lead author, Brattle principal Ryan Hledik, said in a news release. Hledik added that the study demonstrates the importance of utilities and regulators looking beyond conventional demand-response options when analyzing new demand-side opportunities.

Historically, conventional demand response, or DR, provided significant value by reducing peak demand for electricity consumption on the bulk power system. "However, system needs are evolving, with a growing need for renewables integration and grid modernization," according to the news release. "Load flexibility — the real-time control of electricity usage to provide a range of grid services around the clock — can play a key role in addressing these new challenges."

The report singled-out demand reductions, load building, and system balancing as among the

additional high-value services that can be provided through the management of load thanks to various new behind-the-meter consumer technologies, such as energy storage, smart meters, electric vehicles and smart appliances.

Brattle estimated that the approximately 60 GW of current DR capability could nearly double under current market conditions; 16 GW could be added by modernizing conventional DR programs, and another 40 GW could be made available by introducing new load flexibility programs to facilitate the use of smart thermostats and auto-DR "gateways" for accessing electrified building load. The study found that market transformations through 2030, including smart metering deployment, renewable generation adoption, and expansion of the transmission and distribution system, could unlock an additional 80 GW of DR capability.

The resulting total of nearly 200 GW of load flexibility nationwide would save $15 billion annually by 2030 by avoiding investments in generation capacity, reducing energy costs, deferring transmission and distribution investments, and adding ancillary services capability, the study explained.

According to Brattle, avoided generation capacity investment remains the dominant source of value over the next decade as energy benefits increase. However, the study said transmission and distribution deferral and ancillary services are the "cherry on top of the sundae" because they are highly valuable niche applications with limited need.

The study said behind-the-meter consumer technologies will drive the DR transition, which will enable increased load flexibility. The study forecast storage increasing from 100 MW in 2017 to 8,500 MW in 2024, smart meters increasing from 70 million units in 2017 to 90 million in 2020, electric vehicles increasing from 250,000 annual sales in 2017 to 1.4 million in 2025, and smart appliances increasing from being found in 14 million homes in 2017 to 50 million homes in 2020.

The study predicted that over the next decade, utility load flexibility programs will become smarter before they get bigger as existing DR programs are modernized. It also expects residential load flexibility additions to exceed those of larger commercial and industrial customers, despite only having a 30% share of the current DR market.

Finally, the study said new regulatory incentives will be a primary driver of growth in load flexibility due to renewed industry interests in regulatory models that encourage utilities to pursue demand-side initiatives rather than capital investments in infrastructure.

This article was published by S&P Global Market Intelligence and not by S&P Global Ratings, which is a separately managed division of S&P Global.

Return to Top

The Energy Daily
July 8, 2019

Executive Q&A

(Editor’s note: The Energy Daily’s Jeff Beattie sat down with Duke Energy CEO Lynn Good at the Edison Electric Institute’s annual conference last month to discuss some of the key issues facing the nation’s biggest electric utility.)

What are some of the top priorities or challenges that you see for Duke currently?

I would not call it a challenge as much as I would pursuing the opportunities that are in front of this industry. We are in a period of transformation, and trying to pursue that transformation in a quick, efficient and affordable way for our customers is really the agenda for the next

many years. It is investing in energy delivery systems, it is generating clean energy and making sure our customer experience is as good as it can possibly be. That's really where we are focused and I think the pace of change in the industry always gives you an opportunity to ask: 'Are we moving fast enough?' And so that kind of dominates the conversation at Duke because we want to transform in a way that continues to position the company for great success, and for affordable, reliable energy that our customers really value.

So how are Duke's regulators—particularly your primary state regulators in North Carolina, Florida, Indiana, Ohio, South Carolina, Kentucky and Tennessee—responding to that transformation? Are they, generally speaking, facilitating the type of changes that you need to make?

Our regulators are very engaged in the concept of transformation. I think about the cases of renewable development, battery storage, smart meters, electric vehicles, smart cities—there are so many dimensions of innovation that are coming to them as we and our customers enter the transformation. I do think that the model on how to regulate is something that needs to change in certain states over time to better match the investments and customization that goes on.

Our customers are demanding more customized solutions from us, decentralized solutions from us, whether it's a renewable technology, hardening and resiliency which is primarily investment in the transmission and distribution systems, cyber and physical security investment—all of those things are technologies that are changing. The useful life of those assets is likely to be shorter because the technology continues to change. We will be able to deliver immediate benefits and value to customers but the regulatory mechanism needs to recognize that the investment comes more quickly, [and that these are] smaller investments. To have a mechanism that recognizes that is what we're trying to accomplish.

And so I look at it as matching investment with customer benefits, [which is] much more timely than a central station generating plant where it takes us 3-5 years and the customer sees megawatts or megawatt hours. Here, I think we can really deliver a great benefit to customers, and with something like regulatory modernization, it's more predictable, the customers have input into what types of investments you're making, and we have the opportunity to plan it over a long period of time.

What are Duke's thoughts at the moment about offshore wind? There has been, particularly in the Northeast, a real push on that, but regulated distribution utilities are being told, essentially, to pay above-market contracts to underwrite the projects.

We are watching this and we've done some pilot work—this would date back about maybe 5 years plus. We're pleased to see that prices are coming down in certain parts of the world and even some of the market-clearing prices in New England are lower than they would have been five years ago. But there are unique challenges in the Carolinas. We've got military bases that we need to address, shipping channels, fishing. And the other thing that I think about is that our load centers in the Carolinas are not right on the coast; think Raleigh and Charlotte. So you'd need to accompany [offshore wind farm] investment with transmission to get that renewable power where it needs to be. So, as we look at our carbon reduction plans, I think that's a great resource to watch and it could be very important in the late 2020s or 2030s, but I don't need it over the next 5-10 years to achieve our carbon reduction goals. We still have other tools with solar, with retiring coal and building natural gas and maintaining our nuclear fleet.

Many green groups, some Democrats and some states such as California are challenging the

industry on the need for natural gas-fired generation to back renewables. They say utility-scale solar and storage can provide the same reliability, especially if you pursue additional large-scale pumped storage facilities, which are under development in many parts of the country.

Well pumped storage, you know what that is, its building a giant reservoir, pumping water up a hill. We have a beautiful one, 2,000 MW, but I'm not sure we could permit it today. So there you go, it's an incredibly valuable resource and the most valuable battery we own—2,000 megawatts in the western part of our system.

You know, we have spent a lot of time on this. We've modeled our system every hour. Unlike all of California, we are a four-season climate in the Carolinas. I've got winter to deal with. I've got mountains. I've got air conditioning load that is quite substantial in the summer. We are winter peaking; we have been over the past several years. So we see a need for natural gas to maintain reliability in the system. We think batteries will increase over time, but as we model our system hour-by-hour with technologies we see today, with the way a battery works today, the way a renewable [energy plant] works today, our pumped storage, the way nuclear works today, we see a need for natural gas for several decades.

At the same time, you have some communities, Asheville, N.C., comes to mind, where you had demand going up but people fighting your efforts to serve them with a new gas plant. Is this still the environment you face or do you see a resolution?

From an engineering standpoint, Asheville is a tough place to serve because of where it is located, and we have always needed to have generation there because you cannot build enough transmission to give it the stability it needs not only for growth but also for outages and other things that might happen. And so for a long time we were operating a coal plant in Asheville and the community wasn't delighted; they have very strong sustainability goals that they want to achieve. So, in working with that community we put together a plan that had us retiring the coal plant and building natural gas, building solar and working with the community on demand response and energy efficiency ideas. So as that growth continued, the community could work to delay any more generation being put in that area—push out the [schedule for] a peaker plant that may be needed in that area—through demand response and energy efficiency.

That stakeholder engagement is a very important part of the business that we are in. We have an objective to make sure your lights are on all the time and you have an objective to make sure that doesn't include more natural gas. Okay, how can we come together and do something? So I think Asheville has been a real success story for the community and for Duke Energy.

And how about the issue of continued gas use on Duke's climate goals?

If you look at our climate report, we have a clear path of 40 percent reduction by 2030, and we're continuing to look at that and whether or not its aggressive enough—can we go faster? And then we talk about that period 2030 and 2040 where we need more technological innovation. We don't believe we have all the technology today to go to deep, deep decarbonization—I'm thinking 80 percent or 100 percent—and so we are big advocates of R&D around carbon capture, around batteries, around small modular nuclear reactors because at some point we have to have resources that follow the load and by that I mean I have to be able to match load with resources. I do that today with natural gas and other "you have a switch, you turn it on" [resources], and that dispatchability is really important to maintain the reliability of the system. We don't right now see a way to do all of that, for the millions of people who count on us, with batteries and renewables. So I think, taking all of those things

into consideration, given where we serve, given all the technologies that we see today, we see natural gas as being important….

On another key gas issue, the Trump administration, FERC and some RTOs have raised increasing concern about the grid's growing dependence on gas pipelines and the potential impact of pipeline disruptions on reliability. Are you concerned about this so-called "fuel security" issue?

What I would say is that, even though [our largest utilities] don't operate in an RTO, I think the broad theme here is that if you're going to transform, you have be sure that infrastructure is keeping pace. And so as we continue to retire coal and build natural gas, we have to make sure that natural gas infrastructure can keep pace with the appetite.

And as you know, we are an illustration in the Carolinas, where as recently as 10 years ago, there were almost no natural gas plants. So we were dependent on a single pipeline, that's all we needed because there wasn't much gas usage. But you put a few power plants in the picture and all of a sudden your consumption of natural gas goes up pretty dramatically and that has been the business case for the Atlantic Coast Pipeline. I think any time you are pursuing transformation you have to make sure you are making infrastructure investment to support that transformation and gas is a part of that.

We couldn't be at this conference and not discuss electric vehicles and electrification. Some states have struggled with the question of whether they should look to incumbent utilities to build charging infrastructure or should merchants be given a larger role to spur competition and cost reduction. What's your outlook on that?

If you take the theme of carbon, the transportation industry emits more carbon than the electric industry and I think that sometimes gets lost in the conversation. So, the idea of decarbonizing the electric system and then electrifying everything around us is a really powerful message for continuing to drive carbon reduction. So the approach we've been taking in our service territory is to work on foundational levels of charging infrastructure to begin encouraging adoption. We are working with cities, working with states, and we have one of the largest pilot programs that we've introduced in North Carolina that would have 2,500 charging stations. We have one in Florida that is 500 charging stations.

I think this conversation about who should do it just slows us down. Why not let the utilities participate, and if you also want to have a competitive offering, maybe that works, too. But to preclude the utility from being part of investment strategy to achieve a policy outcome around carbon emissions just doesn't make a lot of sense to me.

Would it be good for Duke if Congress were to extend the solar investment tax credit and/or the wind production tax credit?

We are supporters of the bipartisan agreement that was made last time when the agreement was 'let's continue them for a period and then phase them out.' I think what that matches or recognizes is that the resource itself has declined in price to such an extent that it should be able to compete and is competing and so to halt [the tax credits] should free up some resources to do some other powerful things. So we are supportive of the plan to sunset those over the next several years.

There is growing momentum in the development of small modular reactors, but still questions about cost. Are you looking at SMRs or other new nuclear as an option?

Not at this point. Our nuclear team has certainly followed the development of small modular reactors. We have developed a commercial operating license for a large-scale nuclear plant [at a site in South Carolina's Cherokee County] that we have suspended. The license will remain

for a period of time, but as I think about this rapid change that is underway and the economics of large-scale nuclear, the fact that SMRs [aren't] yet through all the processes at the NRC that they need to go through, we think the better strategy is to continue to support the plants we operate and pursue the second license renewals, invest in those and keep them running and then monitor these other developments over time. It [a SMR] may be a solution in the late 2020s, 2030s, 2040s to have characteristics that would help us get to the deep de-carbonization levels.

How does Duke feel about the Affordable Clean Energy rule, the replacement to the Clean Power Plan? What does that do for you?

I think it is interesting looking back on it because the progress that we've made on carbon reduction has exceeded what was originally targeted in the Clean Power Plan. As a result of natural gas and low-cost renewables and demand response and energy efficiency and great nuclear assets, we have been able to make progress without all of the regulation that may have been in place. I think the CPP was subject to a lot of litigation because it was unclear whether the plan fit well within the statutory authority of the EPA, and I think what [the Trump administration's Environmental Protection Agency] is trying to accomplish at this point is--let's put in something that is squarely within the statutory authority that will be sustainable and won't be subject to challenge.

Return to Top

Utilitydive.com
July 3, 2019

Delta-Montrose files restraining order against Tri-State, as others examine buy out costs

AUTHOR

Robert Walton@TeamWetDog

Dive Brief:

Delta-Montrose Electric Association (DMEA) on July 2 asked a Colorado district court for a temporary restraining order against Tri-State Generation and Transmission, as other members look at buy out costs.

Both DMEA and La Plata Electric Association are looking to exit their contracts with the G&T, resisting Tri-State's proposal to avoid state rate oversight by placing itself under federal regulation. DMEA in its order said it seeks to prevent any actions to strip the state's Public Utilities Commission (PUC) of "critical oversight."

DMEA in December asked the Colorado PUC to determine a fair exit charge to leave Tri-State's service. And on Tuesday, La Plata Electric Association (LPEA) filed a formal request with Tri-State to similarly determine the buy-out cost.

Dive Insight:

Facing escalating power costs and limits on the renewable generation it could produce on its own, DMEA turned to state regulators to adjudicate an exit charge. But with the generation provider now considering making moves to invite federal regulation, the small cooperative power supplier fears Tri-State could seek to restart the lengthy process in front of the Federal Energy Regulatory Commission (FERC).

DMEA's lawsuit, filed in Colorado's Adams County District Court, seeks to prevent Tri-State

from adding a new member — one mechanism Tri-State is considering to trigger FERC regulation.

Tri-State operates in four states and currently does not face federal oversight because it is wholly owned by small cooperatives or public power districts, which FERC does not regulate. In Colorado, Tri-State's rates can be subject to regulation if a single member complains; in New Mexico, three protests trigger regulation. Nebraska and Wyoming currently do not oversee Tri-State rates, but that could change.

Tri-State recently published an issue brief on FERC regulation, noting "there is political pressure in New Mexico and Colorado for additional Tri-State regulation on facilities and rates. At some point, Wyoming and Nebraska could also assert jurisdiction."

According to Tri-State, moving to become FERC-regulated would eliminate inconsistent rate treatment across the states where it operates. Some of its members see it different.

"Tri-State's sudden announcement only weeks ago that it would pursue broad FERC oversight is a last-minute effort to undermine the Colorado PUC and prevent it from deciding a fair and reasonable exit charge," DMEA CEO, Jasen Bronec said in a statement. "No one knows who the new member-owner will be or what business purpose it would serve within Tri-State. The sole purpose appears to be an attempt to evade Colorado law by forum shopping."

DMEA is not the only cooperative to consider buying out of their contract. Kit Carson Electric Cooperative in New Mexico bought out in 2016. Now LPEA is looking to do the same, with its request for a cost estimate. Member officials say it is the next step in meeting a goal of reducing carbon emissions by 50% relative to 2018 levels.

"As we have been doing, we're taking a look at this slowly and prudently – doing what is best for our membership, which includes reliability, cost and environmental responsibility," LPEA CEO Mike Dreyspring said in a statement.

Tri-State provides generation for 43-member electric cooperatives and supplies 95% of LPEA's electricity under a long-term contract, which extends through 2050. Determining how to move forward will require cost estimates from Tri-State, officials said.

"Until they can start giving us some numbers, we can't begin to determine what it is going to cost our membership both for a buy-out and to purchase electricity for our members' needs from other sources," the utility said in a statement.

Return to Top

Gas/LNG/Oil Pipelines

EnergyWire
July 8, 2019
PIPELINES

Mountain Valley 'quick take' fight heads to Supreme Court

Pamela King, E&E News reporter

A new battle over pipeline companies' power to seize private property made its way to the Supreme Court last week.

Landowners in the path of the 300-mile Mountain Valley natural gas pipeline through Appalachia asked the justices to consider whether federal courts can allow pipeline firms to

acquire private tracts before paying.

The Natural Gas Act only says a developer behind a project approved by the Federal Energy Regulatory Commission may condemn land after it agrees to provide just compensation, Chris Johns, an attorney for the property owners, argued in Givens v. Mountain Valley Pipeline.

"FERC certificate in hand, the companies run to federal district court asking for a preliminary injunction giving them immediate access to begin bulldozing land and cutting down trees in the proposed right-of-way before securing the state and federal permits needed to lay their line," he wrote in the petition filed last Wednesday.

"They make the request even though the NGA confers no right to early entry and even though there is no guarantee that the permits will ever be granted — or the pipeline ever built."

Gas pipeline developers along the East Coast have used immediate possession, or "quick take," to gain access to private property before project costs balloon out of control.

But some land-use attorneys say federal judges are granting pipeline companies powers that Congress never intended to convey (Energywire, July 2).

"[B]ecause neither state law nor federal statute gives a pipeline company any substantive right to pretrial possession, an injunction granting immediate possession exceeds federal judicial power," Johns argued on behalf of a slew of West Virginia and Virginia landowners.

The case features Karolyn Givens, who, together with her late husband Clarence, raised concerns about the Mountain Valley pipeline's effect on environmental and human health.

When Clarence Givens died in 2017, Karolyn needed to survive on a fixed income tied to the couple's Virginia farm. She testified in federal district court that a quick-take action by Mountain Valley's developers would force her tenant and her cattle away from her land.

"That lost income and her extra costs, both of which would likely not be recoverable in the condemnation proceeding, would impose a real hardship," Johns wrote in the Supreme Court petition.

"For a widow on a fixed income, missing out on one or two years of rents means a great deal."

The Supreme Court has already declined to hear at least two other quick-take disputes this year.

One of the rejected petitions, backed by the conservative firm behind a watershed eminent domain case the Supreme Court heard in 2005, focused on the already-built Atlantic Sunrise pipeline through Pennsylvania.

Attorneys in the Mountain Valley case said the justices may be more inclined to wade into a battle over a pipeline that has yet to be constructed.

Landowner advocates were also encouraged by a recent 5-4 Supreme Court finding that a property taking, absent just compensation, constitutes an immediate violation of the Fifth Amendment (Greenwire, June 21).

The court hears just 1% of cases it receives. The justices will vote on the Givens petition during its next term, which starts in October.

Twitter: @pamelalauren Email: pking@eenews.net

Return to Top

July 3, 2019

Ahead of MVP start, Equitrans seeks to put EEP project into service

By Maya Weber ,Eric Brooks

Equitrans has asked the Federal Energy Regulatory Commission for permission to start service on the Equitrans Expansion Project, saying the project has independent utility as it would increase deliverability to connecting pipelines by 660 MMcf/d, even if the Mountain Valley Pipeline facilities are not completed.

The impact on Northeast markets could be muted, given that the producing area is generally unconstrained and capacity on Equitrans already goes underutilized, indicating a lack of pent-up demand for incremental delivery capacity off the system, according to S&P Global Platts Analytics.

Currently there is about 3.8 Bcf/d of firm capacity under contract on Equitrans, with more than half owned by the gas producer EQT Energy.

EEP was proposed alongside MVP to supply up to 600 MMcf/d of MVP's 303-mile, 2 Bcf/d of greenfield takeaway capacity and expand capacity at existing delivery interconnects with Texas Eastern Transmission, Dominion Energy Transmission, and Columbia Gas Transmission, primarily in West Virginia .

Project details

The Equitrans system has seen rapid growth over the past several years due to its positioning on top of significant Marcellus Shale gas deposits in West Virginia . It delivers this gas into a wide array of longer-haul transmission systems that move gas outside of the region, positioning Equitrans as somewhat of a header system for the region.

EEP entails about 7.4 miles of various diameter pipelines , two interconnects and ancillary facilities in Pennsylvania and West Virginia . About 400,000 Dt/d of firm gas capacity is under contract with EQT Energy. Equitrans has described the project in prior FERC filings as designed to add up to 600,000 Dt/d of incremental north-south firm capacity to bring gas from the central Appalachian Basin to the interstate pipeline grid.

MVP schedule

Both the EEP and MVP projects received FERC certificate authorization in October 2017. MVP is under construction but its completion has been delayed in part by legal holdups including 4th US Circuit Court of Appeals actions striking water crossing authorizations and permissions to cross a short stretch of federal lands. EQM Midstream Partners has pushed back to mid-2020 its official in-service date for MVP.

FERC combined the environmental analysis of MVP and EEP on the grounds that they were interrelated and connected projects.

In a July 2 request at FERC , Equitrans provided a flow diagram that it said clearly shows the EEP request would increase deliverability to Texas Eastern, Dominion and Columbia by an aggregate of 660 MMcf/d.

The request would cover EEP project facilities except those directly associated with deliveries of gas to MVP, such as the Webster Interconnect, a tap and a short segment of pipeline .

Equitrans asked for approval by July 26 so that the service could begin on or before July 31.

Return to Top

EnergyWire
July 8, 2019
PIPELINES

FERC presses Atlantic Coast developer to answer critics

Mike Soraghan, E&E News reporter

Federal regulators have asked the builders of the Atlantic Coast pipeline to answer project opponents' questions about the durability and potential toxicity of protective coating on the pipes.

Critics in the pipeline's path, along with environmental groups, have raised suspicions that anti-corrosion coating on the steel could have deteriorated from exposure to sunlight during months of storage, and that chemicals from the pipes could leach into groundwater.

If the concerns are true, degraded materials could leave the pipeline prone to corrosion and ruptures, potentially contaminating nearby communities' water supplies.

The Federal Energy Regulatory Commission (FERC) last week passed on those questions to Dominion Energy Inc., the lead company on the pipeline. The agency wants answers within 20 days.

Bill Limpert, a staunch opponent of the pipeline who has been pressing the coating issue, welcomed FERC's request.

"Many questions remain, but maybe we'll get some answers," said Limpert, who owns property in the path of the pipeline in the Virginia mountains.

Dominion issued a statement Wednesday saying a third-party company has routinely checked the pipe coating.

"No issues have been identified," the statement said. "These inspections will continue throughout the project until its completion."

The statement did not address the question of whether the coating could contaminate groundwater.

The $7 billion, 600-mile Atlantic Coast project is slated to run from West Virginia through Virginia and into North Carolina. It's backed by Dominion, Duke Energy Corp. and others.

The project has been on hold since the 4th U.S. Circuit Court of Appeals blocked its planned path under the Appalachian Trail in Virginia. Dominion has appealed to the Supreme Court.

Corrosion is a significant safety worry for pipeline operators. But damage to coating from sunlight has not been a widely acknowledged concern. Operators use low-voltage electrical current to prevent corrosion, including spots where the protective coating gets damaged. Inspectors also check the coating before pipe goes into the ground.

Limpert said that in 2017, an official from the Pipeline and Hazardous Materials Safety Administration told him that leaving pipes exposed to sunlight for two years would constitute an unacceptable safety risk. The pipes staged along the Atlantic Coast line were built between two and three years ago, with manufacturing completed by fall 2017.

Limpert has said he also suspects chemicals from the fusion-bonded epoxy coating can get into groundwater. The Natural Resources Defense Council has expressed similar concerns, saying coated pipe for a neighboring project, the Mountain Valley pipeline, has been spotted in trenches with what appears to be groundwater.

FERC told Dominion in its letter Wednesday that the agency needs toxicology and durability information about the coating to respond to the Virginia Department of Health.

Virginia officials sent FERC a letter in March flagging the concerns, saying people in the state had raised questions. The Virginia officials said their research hadn't found specific environmental or health threats, but did discover that sunlight can degrade epoxy resins, producing benzene and other chemicals.

Twitter: @MikeSoraghan Email: msoraghan@eenews.net

Return to Top

S&P Global Platts
July 3, 2019

Group says LNG growth worse than coal for climate; industry calls report flawed

By Corey Paul Market Intelligence

An environmental advocacy group said the expansion of global LNG transportation infrastructure would be "worse than the coal boom" for the climate in an outlook that was at odds with mainstream analysis.

The natural gas industry said the report contained "fundamental flaws."

Environmental group Global Energy Monitor called for a moratorium on the construction of LNG export and import infrastructure in a July 1 report titled "The New Gas Boom." The group said the buildout is incompatible with global climate goals, and many projects would be "unprofitable in the long term" as renewable energy sources become cheaper.

"Given the climate mandate that natural gas be scaled back over the next decade, not to mention the risk to investors of stranded assets and financial losses from overbuilding, a sensible approach to the question of LNG terminal expansion would be a moratorium on further construction," Global Energy Monitor said in the report.

Although the natural gas industry does face significant challenges in long-term projections of a decarbonized energy system that conforms to the climate goals of the international Paris Agreement on climate change, coal-to-gas fuel switching has been widely credited with lowering carbon emissions.

Global Energy Monitor, founded as CoalSwarm in 2008 and funded by organizations that include the Sierra Club Foundation, the Rockefeller Family Fund and the Natural Resources Defense Council, has worked with the Sierra Club and Greenpeace to oppose coal, oil and gas. In its latest report, the group tallied 45.5 million tonnes per annum of LNG export terminals under construction in the world and another 806.9 mtpa worth of projects in "pre-construction."

The report said these facilities together would triple global LNG export capacity. The report cited about $1.3 trillion worth of capital outlays for LNG terminals, including more than $109 billion for LNG import facilities.

But not all LNG projects proposed are expected to be commercially sanctioned and built.

Research and consulting firm Wood Mackenzie estimated in April that the global LNG industry would invest more than $200 billion in natural gas export facilities and upstream infrastructure between 2019 and 2025 to meet growing demand.

The Global Energy Monitor report also assumed a 2.3% methane leakage rate across the supply chains supporting the LNG projects, citing a 2018 study in the journal Science that found 2015 supply chain emissions were higher than U.S. Environmental Protection Agency estimates, equivalent to 2.3% of gross U.S. production.

"Measured by global warming impacts, the scale of the LNG expansion under development is as large or greater than the expansion of coal-fired power plants, posing a direct challenge to Paris climate goals," Global Energy Monitor said.

A spokesperson for the industry-funded Texans for Natural Gas, Steve Everley, called Global Energy Monitor's emissions claims an example of "fundamental flaws with the report that undermine the entire premise."

"Global Energy Monitor dismisses rising global demand for LNG on the basis that renewable costs have fallen in the United States," Everley said. "They apparently don't realize that natural gas is used for more than just power generation, yet they have the audacity to suggest they understand the global gas market better than real experts. They flat out deny peer-reviewed science on climate change and methane emissions, which is not unexpected from a group bankrolled by anti-fossil fuel activists."

Everley pointed to peer-reviewed studies, including an April study published in the scientific journal Nature that assessed the climate benefits of the coal-to-gas shift.

"We found that the coal-to-gas shift is consistent with climate stabilization objectives for the next 50–100 years," the authors of the Nature study said. "Our finding is robust under a range of leakage rates and uncertainties in emissions data and metrics."

This article was published by S&P Global Market Intelligence and not by S&P Global Ratings, which is a separately managed division of S&P Global.

Return to Top

S&P Global Platts
July 5, 2019

McDermott/Chiyoda JV wins incentive to complete US Cameron LNG project on time

By Stuart Elliott

The joint venture of McDermott International and Chiyoda International -- which in 2014 was contracted to build the three-train Cameron LNG project in the US -- has agreed with the project owner the possibility of receiving "incentive bonus payments" for completing the second and third trains on time.

The agreement announced Friday is designed to "optimize the timing and cost-effectiveness of the remaining work" at Cameron LNG in Louisiana , McDermott said in a statement.

A joint venture of affiliates of US -based Sempra Energy, France 's Total, Japan 's Mitsui and a company jointly owned by Japan 's Mitsubishi and NYK , Cameron LNG was hit by delays in late 2017 and early 2018.

The commissioning cargo from the first train of Cameron LNG was finally shipped at the end of May, and the partners are keen to stick to the latest timetable for completion of Trains 2 and 3.

According to the McDermott/Chiyoda JV (CCJV), the agreement with Cameron LNG :

provides the opportunity for incentive bonus payments for achieving construction and commissioning milestones on specified dates for Trains 2 and 3;

aligns the start dates for any schedule-related liquidated damages to be consistent with the current schedule;

and fully aligns and strengthens the commitment of CCJV to complete the project in accordance with the current schedule.

Project economics

Phase 1 of Cameron LNG includes the first three liquefaction trains, which will enable the export of approximately 12 million mt/year of LNG .

McDermott said the project was approximately 90% complete as of the end of the first quarter of 2019. "The company expects initial production from Trains 2 and 3 in the first quarter of 2020 and the second quarter of 2020, respectively," it said, a timeline confirmed by Sempra in a separate statement.

Sempra said the economics of the project would not be affected by the agreement with CCJV.

"We believe it is reasonable to expect that the overall economics of Cameron LNG will not significantly change as a result of this agreement," it said, adding that Sempra 's projected share of full-year run-rate earnings from the first three trains at Cameron LNG continued to range between $400 million and $450 million annually.

The highly anticipated start-up of the first train at Cameron LNG marked the fourth such US project to begin operations since 2016, as the US looks to give shale gas producers more outlets from key basins along the Gulf Coast , in the Midcontinent region and in the Northeast.

Cameron LNG operates a tolling model under which the buyer of the LNG is responsible for securing its own feedgas and deciding where the cargoes are delivered.

Return to Top

The Energy Daily
July 8, 2019

Sempra inks new construction contract on delayed LNG terminal

Sempra Energy and construction contractor McDermott International said Friday they had reached a new agreement that outlines incentives for hitting construction milestones for the completion of Sempra’s Cameron LNG export terminal in Louisiana, which has fallen well behind schedule and has yet to start shipping commercial cargoes.

Neither McDermott nor Sempra offered much detail about the agreement, but McDermott said it strengthens its commitment “to complete the project in accordance with the current schedule” and provided opportunities for bonus payments if the contractors can hit construction and commissioning milestones on Trains 2 and 3 of the LNG export project.

As recently as late 2018, Sempra said it had begun commissioning the first of three

liquefaction trains at the Cameron LNG facility and expected to begin shipping commercial cargoes in the coming months. At the same time, it said Trains 2 and 3 were expected to enter operations in 2019.

Sempra has since shipped the first commissioning cargo from Train 1, but shipping industry publications have reported that no commercial shipments have yet departed due to continuing issues with the liquefaction process. The company also has pushed back the target in-service dates for the second and third trains into 2020.

Those are the latest of a series of delays in completion of Phase 1 of the Cameron LNG project, which would liquefy and export up to 1.7 billion cubic feet per day of natural gas. Last year, activist investors at Sempra highlighted the problems at Cameron LNG as an indication that company executives had lost focus on core operations, and recommended that Sempra spin off Cameron LNG and its earlier-stage LNG export terminals, the Port Arthur project in Texas and Energia Costa Azul on the Pacific Coast in Mexico.

On Friday, Sempra said it expected that “the overall economics of Cameron LNG will not significantly change as a result of this agreement” with McDermott.

However, Sempra noted that “the ability to successfully complete construction projects, such as the Cameron LNG export project, is subject to a number of risks and uncertainties," and that the Port Arthur and Energia Costa Azul projects still had many challenges to overcome before they may advance to construction and operation.

Return to Top

The Energy Daily
July 8, 2019

Dissident shareholders gain momentum in effort to take control of EQT

BY JIM DAY

In a showdown for control of the nation’s largest natural gas producer, dissident shareholders led by the brothers who formerly headed Rice Energy last week gained key support in their effort to take over the board of Pittsburgh-based EQT Energy and install Toby Rice as CEO on promises of improving efficiency and profitability of the company’s Marcellus and Utica gas wells.

The effort to put Derek Rice and six other Rice-backed candidates on EQT’s board has been endorsed by T. Rowe Price and D.E. Shaw, two of the company’s largest institutional investors, and a leading proxy vote advisory firm heading into the final week before the July 10 shareholder vote on the Rice team’s claims that they have a better plan than EQT’s current leaders to set the company on course for long-term profitability.

EQT’s current management has been fighting back by pushing its own slate of directors loyal to CEO Robert McNally, releasing its own plan for improving cash flow and accusing the Rice team of engaging in a misinformation campaign that is undercutting the company’s performance.

The battle for control of EQT highlights the challenges the company and other gas-heavy drillers are facing in a prolonged period of low prices that has cut deeply into margins and sent their stock prices tumbling since 2014 even as gas production has soared to record levels.

EQT bought Rice Energy and its Appalachian basin acreage and midstream assets in 2017 for $6.7 billion, paying a 37 percent premium on Rice's stock price to create the largest gas producer in the country, with a combined production of about 3.5 billion cubic feet per day.

At the time, EQT said it would leverage the company's new-found scale and realize hundreds of millions of dollars in synergies to position itself as one of the lowest-cost and most efficient producers in Appalachia as the gas industry braced for a prolonged period of low prices.

EQT's stock price has lost nearly half its value since the acquisition, however, as a series of disappointing quarterly earnings revealed that the company had largely failed to capture the savings and struggled to gain the expected boost in efficiency.

The company has been in turmoil since the merger. McNally was named CEO in August 2018 as part of a wider overhaul in leadership, and EQT spun off its pipeline business last year just as its flagship project—the controversial Mountain Valley gas pipeline in West Virginia and Virginia—saw its price tag balloon to more than $4.6 billion amid long delays and adverse court decisions.

On the gas production side, the Rice team claims that EQT has squandered what had been Rice Energy's position as one of the lowest-cost drillers in the Marcellus and Utica region. The Rice team said EQT had fired or forced out nearly the entire leadership team at the former Rice Energy, despite what they say was a track record at Rice Energy of rapid expansion and a steady increase in shareholder value.

"EQT's board of directors and management team have been unable to integrate Rice Energy's technology, well designs, land acquisition strategies and operational coordination into EQT's antiquated operating style," the Rice team wrote in the lead-up to the July 10 proxy vote.

"With natural gas prices depressed and the outlook for future price increases uncertain, it is more important than ever that EQT operate efficiently, with large-scale development projects, tight operational coordination and optimized well designs," the Rice team continued. "Our plan can turn EQT into a technology-enabled, sustainable and low-cost energy producer capable of peer-leading well costs and long-term success even in an uncertain commodity market."

Overall, the Rice team claims its plan will generate $500 million per year more in free cash flow than the plan offered by EQT's current management. Based on that plan, three of EQT's largest shareholders—T. Rowe Price, D.E. Shaw and Kensico Capital Management—and the proxy vote advisory firm Institutional Shareholder Services (ISS) late last month threw their support behind the Rice team's slate of directors and Toby Rice as their proposed CEO, with D.E. Shaw saying: "We are fully convinced that the proven talent on the Rice team is the best and most reliable choice to successfully operate these assets going forward."

Wall Street appeared to nod in agreement, as EQT stock shot up 10 percent June 28 on news of ISS and Kensico's support of the Rice team.

EQT's current management has been fighting back aggressively, pointing to a study by consultant Wood Mackenzie that indicated EQT's well productivity, costs and planning efficiency are as good or better than Rice Energy's ever were.

Further, EQT says the Rice team's claims do not recognize recent improvements EQT has made or that the company's revamped leadership has been effective in setting EQT on a course to generating greater cash flows.

In any case, the Rice team's claims of how much its plans would reduce costs are "baseless and unachievable," EQT said, suggesting that the dissident shareholders' attempt to take

control was more a power grab than a reasoned effort to improve operations.

“Toby Rice’s campaign is centered on replacing the majority of the board and installing himself as CEO, at which point he has indicated that he would replace up to 15 of the company’s department heads with former Rice Energy employees—changes that we believe would derail EQT’s progress,” EQT wrote to shareholders June 28. “EQT’s refreshed board and management team are executing an aggressive, bottom-up strategic plan to accelerate the company’s transformation into a free cash flow leader.”

EQT noted that its slate of seven directors has the support of current management as well as the five independent directors that are supported by both EQT and the Rice team.

Those five directors that have the support of both sides last week urged shareholders to vote for the EQT slate, saying the recent changes at the company have put it on the right track.

“EQT has been through enormous disruption over the last two years, from the numerous complex transactions to facilitate the spin-off of Equitrans Midstream Corporation to substantial turnover in the C-suite,” those directors wrote July 2. “We believe this management team’s performance over the last three quarters has earned it the chance to show that it can achieve the continued turnaround we seek.”

Much of the dispute revolves around which leadership team could best implement operational changes that could cut costs and boost well productivity, with competing claims from both sides on their expected cost per foot of drilling horizontal wells, the estimated ultimate recovery of resources from wells and efficient use of drilling rigs and available acreage.

The hope is to turn around the company whose stock was trading at $60 a share in June 2014 before it collapsed with falling oil prices until 2016 and then continued the decline to the $15 price as of Friday. That pattern mirrors the decline in stock prices of other gas-heavy drillers such as Chesapeake Energy, Range Resources and Southwestern Energy.

Return to Top

Michiganradio.org
July 5, 2019

Rural Macomb County residents plead for better safety from proposed gas compressor

By TRACY SAMILTON •

A group of northern Macomb residents are bracing for the construction of a new gas compressor station, saying it lacks a safety feature that could protect them in the event of an explosion.

The community near the site on Omo Road in Ray Township is about a mile from the Consumers Energy gas compressor station that was shut down temporarily in January when a fire broke out.

Advocates say that's made residents even more fearful than they were before, and that the company that plans to build the new station, Bluewater Gas Storage, has a bad track record in the area.

Valerie Brader of Rivenoak Consulting says there were explosions in 2011 and 2014 at Bluewater-operated compressor stations in the area.

"These are folks whose homes shook in the Consumers explosion and whose homes shook in

the 2014 explosion, so these are folks who have been personally affected," says Brader.

Brader says there's a common-sense solution that would add very little to the $40 million dollar cost of the project.

She says an earthen berm around the compressor station would protect residents from an explosion or fire that starts at the station - and also prevent drivers from accidentally piling into the station and causing an explosion.

She says that's what happened in Melvindale in 2016, when she was Michigan Department of Energy Director.

"An impaired driver veers off the road and hits an above-ground gas main, and they evacuate a thousand or more people out of Melvindale at 3:00 in the morning," says Brader. "The fire chief said it was the worst fire he had ever seen in his life."

Brader says the big problem for residents is the Federal Energy Regulating Commission does not require earthen berms around compressor stations, even though it would also protect Bluewater Storage from having to pay damages in the event of an accident.

That leaves residents hoping they can convince Bluewater Storage, which is owned by Wisconsin Energy Corp., to do it anyway, as a show of good neighborliness.

Brendan Conway, a spokesman for Wisconsin Energy, sent the following statement:

Safety is always our first priority in the design and operation of our facilities. The proposed compressor station is designed to meet all the safety standards required by the Federal Energy Regulatory Commission and Pipeline and Hazardous Materials Safety Administration.

We also follow extensive preventive measures and procedures, including, preventive maintenance, 24/7 pipeline monitoring, ground surveys, cathodic protection to inhibit corrosion, and in-line inspections to ensure pipeline integrity.

We have met with the neighbors and community to discuss the project and will continue to address their concerns as we work through the permitting process.

Return to Top

Therealnews.com
July 7, 2019

As Activists Push Democratic Climate Debate, DNC Donors Profit from Oil, Gas

By: Steve Horn |

After weeks of pressure from climate activists, the Democratic National Committee is officially considering a pair of resolutions on whether to host a debate focused exclusively on climate change, reversing the earlier position of DNC Chair Tom Perez.

This comes after the first two Democratic Party presidential debates in Miami, in which only 15 minutes worth of discussion about the climate crisis ensued within the four hours of debate, both times not until the second hour of the debate. This occurred despite 63-percent of Democrats saying in a recent poll that it is "very important" for them to hear candidate's policy stances on the climate crisis at debates, the highest percentage of any policy category.

Lack of a scheduled climate-specific debate moved activists with the Sunrise Movement to gather outside of the DNC's headquarters in Washington, D.C. before and during the first round of debates in Miami and demand a climate debate. In response, the DNC locked the door on Sunrise, leaving them outside. Their protest turned into a sit-in with activists camping out for the next two nights.

Sunrise Communications Director Stephen O'Hanlon told *The Real News* that he believed how Democrats treated Sunrise would be different if they were a group of fossil fuel industry lobbyists.

"We asked to go up and have a meeting with members of the DNC, and they refused. They locked the doors on us," O'Hanlon said. "You can bet when the oil and gas lobbyists come here they don't have the doors locked on them."

In fact, one fossil fuel industry-connected adviser, Ernest Moniz, is connected to one Democratic candidate currently leading in the polls. He is former Vice President Joe Biden's climate adviser and served as U.S. Secretary of Energy under President Barack Obama.

Moniz's connections to the fossil fuel industry and to high-level Democratic donors with ties to the oil and gas sector show that, despite a push by activists for a Democratic climate debate and for candidates to reject fossil fuel money, the industry still carries significant clout within the party's highest level.

"Industry Puppet"

Moniz is a nuclear physician by academic background, known by many as a key broker of the nuclear deal signed between the U.S. and Iran.

But while working at the Massachusetts Institute of Technology before becoming Energy Secretary, Moniz also headed up the MIT Energy Institute, an entity heavily endowed by companies such as BP and Chevron which was instrumental in promoting hydraulic fracturing ("fracking") for shale gas during his time there. In a lengthy 2013 investigative report examining Moniz's full track-record at MIT promoting policies favorable to the oil and gas industry, Public Accountability Initiative called Moniz an "industry puppet."

More recently, Moniz has written in opposition to the Green New Deal proposal being pushed by the Sunrise Movement and their allies in the climate justice movement, instead calling for a "Green Real Deal." In that CNBC article, Moniz touts "electricity decarbonization" which "has taken [off] because of the natural gas revolution that has reduced coal use." Biden's policy team has said it aims to achieve a "middle ground" on climate policy, a stance criticized by rival candidate Bernie Sanders, U.S. Rep. Alexandria Ocascio-Cortez (D-NY) and others.

Moniz and Biden also share a crucial tie to a key financier of the Democratic National Convention set to take place in July 2020 in Milwaukee, where whoever comes out victorious after the debates and primary elections will be named the party's presidential nominee.

LNG Garden of Edens

That financier is Wes Edens, the co-owner of the Milwaukee Bucks. He is also the co-founder and co-CEO of the firm Fortress Investment Group, which has a natural gas-focused subsidiary named New Fortress Energy.

In its most recent annual report filed with the U.S. Securities and Exchange Commission (SEC), New Fortress cites the "historic abundant supply of natural gas and discoveries of substantial quantities of unconventional, or shale, natural gas" as the bedrock of its business model. It also notes that most of the gas it will commodify, and indeed most of the gas

produced in the U.S. market, comes from fracking.

Methane is a greenhouse gas 86-105 times more potent than carbon dioxide as a heat trapping agent over a 20-year period, the key period during which most climate scientists say major action must be taken to combat the potential ravages of climate change.

In Florida, one of the Edens owns a natural gas liquefaction facility located about 10 miles west from the first round of debates took place, near Miami, in Hialeah. New Fortress has already begun shipping liquefied natural gas (LNG), a super-chilled version of natural gas allowing it to be shipped in containerized form, out of the Hialeah Rail Yard and to the global market.

That gas currently goes to goes primarily to a power plant in northwest Jamaica, the first country New Fortress signed on for a major LNG supply deal.

Biden and Moniz helped make that deal a reality.

After closing the deal on shipping LNG from the Miami area to Jamaica, New Fortress carried that momentum into getting deals in place to ship LNG to destinations such as Puerto Rico, Mexico, Ireland, Angola, with ongoing negotiations to do the same in the Dominican Republic.

LNG Trucks and Rail, Gas Rivers

New Fortress' natural gas-centric energy proposals, though uncontested in Jamaica (at least according to all available press accounts), have received some opposition in the U.S. One of those sites of opposition is along the Delaware River.

A New Fortress subsidiary submitted an application with the Pennsylvania Department of Environmental Protection (DEP) in December 2018 for an $800 million facility which would superchill and liquify shale gas.

Interstate pipeline projects must undergo a robust regulatory process, overseen by the U.S. Federal Energy Regulatory Commission (FERC), which includes public comments and hearings. But shipping LNG by rail and truck would help New Fortress avoid that.

New Fortress Energy's DEP application says that the company could use 400 LNG trucks per day to ship LNG to an export facility in New Jersey. It may also eventually ship the LNG by rail.

A different New Fortress subsidiary got an initial environmental permit on June 6 from the U.S. Pipeline and Hazardous Materials Safety Administration (PHMSA) to ship LNG by rail. In response, U.S. Rep. Peter DeFazio (D-OR) introduced an amendment to a House appropriations bill, calling for a ban on LNG by rail shipments due to cited safety issues. It passed mostly along party lines as part of a House appropriations bill on June 24.

"These will be six trains a day going through the most populated parts of Florida, cars in each train," DeFazio said on the House floor before the affirmative amendment vote. "And, oh, by the way, within the blast zone is Mar-a-Lago. Are they going to allow the trains to run while the President is there?"

DeFazio has also since requested a 30-day extension on PHMSA's final ruling, to allow for more public comments and discussion over safety issues.

Environmental groups such as Delaware Riverkeeper and the Sierra Club of New Jersey have also raised safety concerns about LNG. They say it is chemically volatile which means it could TKTKTK. Further, they say it will incentivize more fracking, bringing with it community health impacts and more broadly, global climate impacts.

"LNG brings with it the hazards of a spill and release. If LNG liquid is released it creates a serious safety hazard for those around," wrote Delaware Riverkeeper in a May 29 letter to the Delaware River Basin Commission.

Along another river, the Ohio, another New Fortress subsidiary has begun building out a natural gas power plant, as well as a frac sand processing hub, all connected to area pipelines and rail networks. Calling it the Long Ridge Energy Terminal, the Hannibal, Ohio-based facility aims to open by 2021. Frac sand, the mining for which has brought with its own community health impacts, is what enables gas to fissure and flow through wells during the fracking process. Construction of the power plant, dubbed the Long Ridge Energy Generating Project, began on June 18.

"Once In a Lifetime"

Edens co-owns the Milwaukee Bucks with Marc Lasry. With a net worth $1.8 billion, Lasry is also heavily involved in the fossil fuel industry via the private equity firm for which he works as co-CEO, Avenue Capital Group.

When global oil trading prices crashed in 2015, Lasry called it a "once-in-a-lifetime" investment opportunity. Just months before making those comments, Lasry's Avenue Capital created Avenue Energy Opportunities Fund, putting over $1.25 billion into the cause.

As an individual institutional investor, SEC filings show Lasry has over half a billion dollars invested in oil companies such as TransOcean (one of the oil services companies responsible for the 2010 BP oil spill in the Gulf of Mexico), Pacific Drilling, Chaparral Energy, Ultra Petroleum and others.

Aberdeen Income Credit Strategies Fund—an Avenue Capital-managed fund which oversees investments for pension plans, endowments, foundations and other institutional investors—also has heavy investments in the fossil fuel industry. According to its most recent quarterly listing of portfolio holdings filed with the SEC, Avenue's Aberdeen has investments in the tar sands extraction companies Southern Pacific Resource Corp and Connacher Oil, the offshore drilling rig company Seadrill Partners, California's largest oil and gas driller California Resources Corporation, the fracking company Calfrac Holdings and others.

In 2017, Lasry announced he would shift Avenue Capital's investment focus in the direction of financially distressed power plant companies.

One of the first examples of that happened at the Charles P. Crane Generating Station in Baltimore, formerly powered by coal until shuttering in 2018. Avenue Capital bought the power plant in 2016. The plant got a restart permit to switch from coal to natural gas power generation from the Maryland Public Service Commission on May 21, to the chagrin of area climate activists, who have argued against reopening the facility as a gas-powered entity.

Lasry's Avenue Capital also has joint venture relationship with Middle River Power, a company which focuses on investing in natural gas power plants throughout California, as well as owning one each in Virginia and West Virginia.

Bucks Stop Here

Next year's Democratic National Convention will be held in Milwaukee, at the Milwaukee Bucks' stadium, Fiserv Forum.

Both Edens and Lasry have also functioned as key donors to Democratic presidential and congressional candidates in recent years. According to federal election contribution data, Edens gave $61,700 to the DNC during the 2016 presidential election cycle, while Lasry gave $72,800. Lasry's wife, Cathy, also gave $33,400 to the DNC during that cycle.

Marc Lasry's son, Alexander Lasry—also the Senior Vice President of the Bucks—will work as the finance chair for the 2020 convention. Alexander Lasryformerly worked as an aide to Obama White House senior advisor Valerie Jarrett.

Alexander Lasry did not respond to a request for comment for this story, nor did press representatives for Fortress Energy Group or the Democratic National Committee.

"Not Serious"

DNC Chairman Perez has written that he does not believe single-issue debates should be held because some will feel short changed that their topic of passion was not similarly singled out.

"If we change our guidelines at the request of one candidate who has made climate change their campaign's signature issue, how do we say no to the numerous other requests we've had?" Perez wrote in a June 11 article published on *Medium.com*. "How do we say no to other candidates in the race who may request debates focused on an issue they've made central to their own campaigns?"

But in response to the lack of a scheduled climate debate, the organization Progressive Democrats of America paid for a half-page advertisement open letter published in *The Miami Herald* on June 27 calling for one in the name of the unprecedented climate emergency. It was co-signed by numerous progressive climate thought leaders, including Naomi Klein, Bill McKibben, Josh Fox, Tim DeChristopher and others.

The Sunrise Movement, for its part, has continued to beat the drum on what it sees as a need for a Democratic climate debate, and will reveal more plans about the next steps in its campaign in a July 2 webinar.

"It's absurd to host a debate in Miami—a city where millions of people could lose their homes due to sea level rise that's also only 20 miles from the Everglades where massive fires are out of control—and spend only a few minutes on the climate crisis," wrote Sunrise Movement's Director, Varshini Prakash, in a press release after the debate. The debates, she added, "made it crystal clear that the media and the political establishment are out of touch with our generation."

Rob Galbraith, a Senior Research Analyst for the Public Accountability Initiative—an organization which oversees the website LittleSis.org and specializes in power mapping research—addressed the role of Edens directly. Galbraith co-authored a 2013 study examining the industry connections Moniz brought with him to the Energy Department.

"Financial firms like Wes Edens' New Fortress Energy are critical players in propping up the fossil fuel industry, which is responsible for our current climate crisis," said Galbraith, co-author of a 2013 study examining the industry connections Moniz brought with him to the Energy Department. "By giving taking Edens' money, awarding him a position of influence on the host committee of the party convention, and refusing to hold a debate about the most critical challenge of our time, the Democratic Party is showing that it is not serious about addressing climate change."

Return to Top

Congress

E&E Daily
July 8, 2019
NATURAL GAS

Senators to review global LNG export landscape

Jeremy Dillon, E&E News reporter

The status of liquefied natural gas exports will get Senate attention this week during an Energy and Natural Resources Committee hearing.

It follows a string of Trump administration accomplishments related to LNG exports as the United States looks to ship its "energy dominance" to European and Asian markets.

Through a combination of increased production and new export terminals coming online, the United States became a net exporter of natural gas in 2017 for the first time in nearly six decades.

Those shipments, which started in 2016, have gone to 35 countries in 2019 so far, scaling across the globe from China to much of South America. And more is likely on its way.

DOE and the Federal Energy Regulatory Commission gave the go-ahead on three additional export terminals this year in the Gulf of Mexico.

Those include the Driftwood project in Calcasieu Parish, La.; the Port Arthur project Port Arthur, Texas; and the Calcasieu Pass LNG project in Louisiana.

The administration has been a vocal advocate for increased LNG exports to Europe, framing the overseas sales as a diplomatic tool meant to undercut Russian aggression.

President Trump has repeatedly pressed European countries like Germany to abandon support for the Russian-backed Nord Stream 2 pipeline, arguing that further reliance on Russian gas could expose the countries to security concerns.

Senate Energy and Natural Resources Chairwoman Lisa Murkowski (R-Alaska) also has an interest in increased shipments as her home state looks to expand natural gas production, with a nearly 800-mile-long pipeline connecting the North Slope to an export terminal that will have the ability to ship to energy-hungry Asian nations.

But all those shipments still have some lawmakers worried that the country may be exporting its natural gas abundance abroad, leading to higher long-term energy prices at home.

Sen. Angus King (I-Maine) has raised those concerns in the past. Also hanging over the hearing are the climate benefits — or drawbacks — of increased LNG exports.

Republicans, led by Louisiana Sen. Bill Cassidy, have argued that the U.S. supply of natural gas represents a more realistic option of transitioning global energy supplies away from more carbon intensive coal-fired power plants.

Fears remain though among more progressive Democrats that the power sector across the globe needs more immediate decarbonization in favor of renewable technology. More LNG global exports may only look to boost the dependence on the fossil fuel.

Schedule: The hearing is Thursday, July 11, at 10 a.m. in 366 Dirksen.

Witnesses: TBA.

Twitter: @JeremyDillonDC Email: jdillon@eenews.net

Return to Top

E&E Daily
July 8, 2019
SECURITY

Panel to gauge grid hacking defenses

Blake Sobczak, E&E News reporter

House lawmakers are set to review strategies to protect the U.S. power grid from hackers during a hearing Friday.

The House Energy and Commerce Subcommittee on Energy will host grid security experts for a panel on "keeping the lights on" amid an uptick in cyberthreats.

The subcommittee's chairman, Rep. Bobby Rush (D-Ill.), has stressed the importance of building out utilities' cybersecurity workforce in past hearings that covered power grid security.

The hearing will likely cover mandatory cybersecurity standards set by the nonprofit North American Electric Reliability Corp. and the Federal Energy Regulatory Commission, an independent agency that gets final say over grid reliability rules.

Last month, FERC signed off on a new cyber incident reporting standard that will require large electric utilities to report more information on day-to-day hacking threats (E&E News PM, June 20).

Though a cyberattack isn't known to have ever caused a power outage in the U.S., suspected Russian hackers managed to briefly cut off electricity to about a quarter-million Ukrainians in late 2015 and again in 2016.

Top U.S. intelligence and homeland security officials have also repeatedly warned about the potential for state-backed hackers — whether from Russia, China or even Iran — to meddle in American critical infrastructure networks.

"Russia has the ability to execute cyber attacks in the United States that generate localized, temporary disruptive effects on critical infrastructure — such as disrupting an electrical distribution network for at least a few hours — similar to those demonstrated in Ukraine in 2015 and 2016," U.S. Director of National Intelligence Dan Coats warned in an assessment of worldwide threats in January.

Less than two months later, hackers managed to disrupt some facet of grid communications for an unidentified electric utility in the western U.S. via a denial-of-service attack (Energywire, May 6).

While that incident never resulted in any power outages, it brought heightened scrutiny on the power sector's readiness to face emerging online threats.

Schedule: The hearing is Friday, July 12, at 9:30 a.m. in 2123 Rayburn.

Witnesses: TBA.

Twitter: @BlakeSobczak Email: bsobczak@eenews.net

Return to Top

E&E Daily
July 8, 2019
ENERGY POLICY

Committees to advance technology, storage bills

Jeremy Dillon, E&E News reporter

Committees in both the House and Senate are poised to review a roster of energy bills this week.

A handful of power storage measures will get a Senate Energy and Natural Resources subcommittee legislative hearing this week featuring Department of Energy officials.

The hearing adds momentum to the bipartisan interest in bolstering the federal government's research and development role in storage — dubbed the "holy grail" of energy by advocates and Energy Secretary Rick Perry.

Topping the agenda is S. 1602, from Sen. Susan Collins (R-Maine), to authorize some $300 million over the next five fiscal years into energy storage research.

The motivation, Collins has said, is to focus DOE efforts on bringing down the costs of the technology in a manner like the agency's successful SunShot Initiative, which saw solar costs decrease by 75% over a decade.

"One of the biggest hurdles to commercializing energy storage is cost," Collins said on the Senate floor while introducing her bill in May.

Also under consideration, a new bipartisan proposal, S. 2048, from Sens. Angus King (I-Maine) and Martha McSally (R-Ariz.), introduced just before last week's recess.

The bill would direct DOE's Advanced Research Projects Agency-Energy and the Department of Defense's Environmental Security Technology Certification Program (ESTCP) to team up on demonstration projects for long-duration energy storage. The measure would authorize nearly $500 million over the next five years.

"A joint demonstration program between DOD and DOE will also be able to utilize existing test-bed infrastructure and provide key field data at both agencies that will help accelerate commercial deployment of long-duration energy storage technologies to increase energy resilience and security," a bill one-pager from King's office said.

Democrats also have their own proposals that would infuse even more research dollars to expand the utility and duration of energy storage projects.

Minnesota Democratic Sen. Tina Smith's S. 1593 would attach additional research funding for battery storage by providing about $1 billion over the next five years.

The bill would also direct DOE to better coordinate its energy storage research and development into a cohesive strategy, and it would open up some funding to "public and private entities wishing to expand their energy storage capabilities," according to a news release.

Oregon Democratic Sen. Ron Wyden's S. 1741 would infuse about $3.3 billion into DOE storage research over the next decade.

Sen. Amy Klobuchar (D-Minn.) has a bill, S. 1183, that would direct $25 million over the next five years for grants to assist rural electric cooperatives with energy storage and microgrid projects.

Efficiency, carbon bills

ENR Chairwoman Lisa Murkowski (R-Alaska) has a bill, S. 1857, on the agenda that would direct the federal government to reduce energy and water usage over the next decade by 25% and 54% through a $360 million funding authorization.

Sen. John Cornyn (R-Texas) has a bill, S. 1685, that would authorize $50 million a year until fiscal 2025 for DOE to launch and conduct a research program into the capture of carbon from the use of natural gas.

Delaware Democratic Sen. Chris Coons' S. 983 would bolster DOE's weatherization program. That measure would reauthorize the Weatherization Assistance Program at $350 million through fiscal 2024.

S. 1064, from ENR Committee ranking member Joe Manchin (D-W.Va.), would direct a federal government study on the "national economic security impacts of building ethane and other natural-gas-liquids-related petrochemical infrastructure in the geographical vicinity of the Marcellus, Utica and Rogersville shale plays," according to the text.

DOE is currently conducting a similar study on the potential for a petrochemical buildout focused in Appalachia in response to a White House executive order from earlier this year.

S. 143, from Sen. Joni Ernst (R-Iowa), would establish a research program at DOE to use artificial intelligence to help with veterans' health initiatives.

House markup

In the House, the Science, Space and Technology Committee will vote on a trio of newly introduced bills Wednesday. They are:

H.R. 3597, the "Solar Energy Research and Development Act," from Rep. Ben McAdams (D-Utah), would "guide and authorize basic research programs" related to solar.

H.R. 3607, the "Fossil Energy Research and Development Act," from Rep. Marc Veasey (D-Texas), to direct fossil energy research and "promote the development and demonstration of environmentally responsible coal and natural gas technologies."

H.R. 3609, the "Wind Energy Research and Development Act," from Rep. Paul Tonko (D-N.Y.), to "provide for a program of wind energy research, development, and demonstration."

Schedule: The hearing is Tuesday, July 9, at 10 a.m. in 366 Dirksen.

Witnesses:

Bruce Walker, assistant Energy secretary, Office of Electricity.

Shawn Bennett, deputy assistant secretary for oil and gas, Office of Fossil Energy.

Schedule: The markup is Wednesday, July 10, at 2 p.m. in 2318 Rayburn.

Twitter: @JeremyDillonDC Email: jdillon@eenews.net

Return to Top

E&E Daily
July 8, 2019
TRANSPORTATION

Momentum grows on infrastructure, FAST Act

Geof Koss and Maxine Joselow, E&E News reporters

Senate Environment and Public Works Committee lawmakers will turn their attention to infrastructure again this week, with legislation expected before the August recess.

The committee will hold a hearing Wednesday titled "Investing in America's Surface Transportation Infrastructure: The Need for a Multi-Year Reauthorization Bill."

Lawmakers will focus on the looming reauthorization of the Fixing America's Surface Transportation (FAST) Act, which is set to expire in October 2020.

The White House and both parties were originally hoping to accomplish infrastructure reforms through a broad legislative package.

But the package appeared doomed after President Trump stormed out of a May meeting with Democratic leadership, saying he couldn't collaborate with Democrats on infrastructure while they were investigating his presidency (E&E Daily, May 23).

With the broad package out of the picture, the FAST Act reauthorization is now the preferred vehicle for passing narrower surface transportation reforms.

Environment and Public Works Chairman John Barrasso (R-Wyo.) said before the July Fourth recess that he plans to pass the bill through his committee before the August break. "That's the plan," he told E&E News.

Ranking member Tom Carper (D-Del.) said about bipartisan talks, "We made real progress. The spirit is good on both sides. We want to find principles of agreement. We know how important it is."

Carper said he expects the bill to address some Democratic clean energy priorities, including the expansion of charging stations for electric vehicles and other alternative vehicles. "That's part of what we plan to do," he said.

Carper declined to offer any new details of how the bill will be paid for, given an expected deficit in the Highway Trust Fund.

"Ultimately, we're going to move toward a vehicle-miles-traveled approach," he said. "And within 10 years, that's where we'll be. My question is, we need a bridge to that future and what's that bridge going to be? I have some ideas, and we'll have the opportunity to hear from my colleagues with their ideas on [the] Finance [Committee]. Stay tuned."

There's bipartisan support for raising the federal gas tax to cover the shortfall, although it's a politically perilous endeavor made more complicated by the 2020 elections.

Highlighting the challenge, the Koch brothers-funded Americans for Prosperity is drumming up opposition to a gas tax hike.

Also this week, the House Science, Space and Technology Committee will discuss similar issues during a hearing on the "need for a national surface transportation research agenda."

Schedule: The EPW Committee hearing is Wednesday, July 10, at 10 a.m. in 406 Dirksen.

Witnesses: TBA.

Schedule: The Science Committee hearing is Thursday, July 11, at 2 p.m. in 2318 Rayburn.

Witnesses: TBA.

Twitter: @geofkoss Email: gkoss@eenews.net

Return to Top

E&E Daily
July 8, 2019
APPROPRIATIONS

Budget talks reaching decisive moment

Geof Koss, E&E News reporter

Lawmakers return to Washington, D.C., this week looking to make headway on fiscal 2020 appropriations.

The most pressing task is finishing as much of the annual appropriations process as possible before the extended August recess, after which lawmakers will have just a few weeks to reach agreement to fund the government after the Sept. 30 end of the fiscal year.

Senate leaders are facing tough decisions on how to proceed, given the lack of a budget deal that would head off tens of billions of dollars of automatic spending cuts scheduled to kick in in the fall.

While the House has already passed 10 of the 12 annual spending bills, Senate appropriators have yet to even schedule a markup on any of the measures.

Appropriations Chairman Richard Shelby (R-Ala.) said before the break that the Senate may follow the House's lead and simply "deem" overall spending levels, which would lack the force of law but would allow the subcommittees on his panel to begin writing and marking up bills while negotiations between Congress and the White House continue on a budget deal.

"If there's no agreement come first week of July, I think we'd have to seriously consider assuming some numbers and try to keep the process moving, hoping that there's a breakthrough later," Shelby told reporters late last month.

He suggested that the early emphasis may be on "a couple of the biggest bills first" — a strategy also employed by House Democrats, who last month passed a five-bill spending package totaling nearly $1 trillion that included funds for the Energy Department, Army Corps of Engineers and Defense Department, among other agencies (E&E News PM, June 19).

Before the Independence Day break, the House separately passed a second five-bill spending package that includes funding for EPA and the Interior Department, leaving just the Legislative Branch and Homeland Security bills remaining (E&E News PM, June 25).

The dozens of amendments the House voted on last month also provided election-year fodder, as the League of Conservation Voters unveiled a $17,000 targeted ad campaign in members' districts, highlighting votes on drilling in the Arctic National Wildlife Refuge and EPA's efforts related to mercury standards for power plants (E&E Daily, June 21).

Such provisions won't advance in the GOP Senate, and the House bills are merely placeholders until there's a budget deal, as Senate Majority Leader Mitch McConnell (R-Ky.) noted before the break as he raised doubts about Shelby's deeming strategy.

"The House, because they can do things more quickly, obviously made a decision to go and pick out their dream number and go out and mark their bills up to that," he told reporters.

"I don't think that works for us, and I think the way forward, in the absence of a caps deal, at least for Senate purposes, is more complicated," said McConnell.

"But we are going to continue to talk about this and hopefully get a resolution to how much

we are going to spend this year, next year and the debt ceiling all together, so we don't end up with these periodic, chaotic situations where we all see us go from time to time."

However, McConnell called "completely unacceptable" the automatic spending cuts that will occur without a budget deal, which he said would lead to a $71 billion reduction for the Pentagon.

"Equally unacceptable," he added, is the effect on the Department of Defense of a one-year continuing resolution — an unpopular option that the Trump administration has floated as a backup plan and one that 15 GOP senators urged the administration to avoid last week, citing the impacts on military readiness.

"As the world continues to become more dangerous, the American people rightfully expect their representatives in Washington to put aside political differences and do their jobs," wrote the group, led by Sen. David Perdue (R-Ga.).

"Simply put, our adversaries do not handcuff their militaries with funding gimmicks like continuing resolutions — nor should we."

McConnell indicated that talks will continue. "That leaves you with accepting the result of last year's election, which is — we are a divided government, and when the American people elect divided government, they say, 'OK, you guys figure out how to work together, even though we know you have lots of differences,'" he said.

"So far, that has not been successful. I'm disappointed that we have not gotten there, but I haven't given up."

Twitter: @geofkoss Email: gkoss@eenews.net

Return to Top

Other Agencies

EnergyWire
July 8, 2019
LAW

White House climate guidance could spark NEPA battles

Pamela King and Jennifer Hijazi, E&E News reporters

New White House rules on how federal regulators should consider greenhouse gas emissions could leave the government at risk of unfavorable courtroom rulings.

The Council on Environmental Quality's draft guidance, which rolls back key elements of an Obama-era instruction document, comes as courts are showing an increased desire for robust climate analyses in National Environmental Policy Act reviews, environmental lawyers say.

While the CEQ guidance itself is not legally binding, agencies that hew to the recommendations could find themselves in legal trouble, said Eric Glitzenstein, litigation director at the Center for Biological Diversity.

"Agencies would in various ways be facing a pretty serious legal risk if they were to scrupulously follow everything in this guidance," he said. "That's where litigation would come to the fore."

The guidance instructs federal agencies on how to consider both indirect and direct emissions

under NEPA and has broad implications for how the federal government handles climate analyses supporting energy development on public lands, pipeline construction and other infrastructure efforts.

Courts have recently struck down climate elements of NEPA reviews for big energy projects like the Keystone XL pipeline and oil and gas leases in Western states.

But conservative interests see glimmers of hope in appellate court decisions to dissolve a construction block on Keystone XL and to uphold more limited climate reviews of natural gas transport projects.

As long as agencies are consistent, the CEQ guidance gives the government a platform on which to walk back its consideration of greenhouse gas emissions from federal projects, said Jeff Wood, a Baker Botts LLP attorney who defended Trump administration policies as the former acting head of the Justice Department's environmental practice.

"I expect courts generally to be deferential to those levels of review," he said. "If agencies are inconsistent or fail to adequately explain why they took one approach over another, then they may encounter difficulties."

Other experts say the guidance is far too thin to have a substantial reach in courts.

CEQ's proposal would tell agencies they need not quantify direct and reasonably foreseeable indirect greenhouse gas emissions unless they are sufficiently "substantial" and unless there are available tools to do so, Glitzenstein said.

The guidance would also nix analyses of cumulative effect because of their "inherently" global nature. Instead, CEQ instructs agencies to place projects in a local, regional, national or industrywide context.

Gone are agency instructions to consider alternative actions that could mitigate climate impacts.

The net effect is "contentless happy talk" that lends no legal authority for agencies to skirt climate analysis, said David Hayes, executive director of the State Energy & Environmental Impact Center at New York University and an Interior Department appointee under President Obama.

"Courts will defer to expert agencies' views of the scope of their obligations under the law, but the agencies have to demonstrate that they are in fact experts that are worthy of deference, and this guidance doesn't cut it," Hayes said.

"There's no evidence in this guidance that CEQ is bringing a specialized analysis into the equation here that deserves judicial deference."

Climate in the courts

Courts paid attention to greenhouse gas emissions in NEPA reviews years before the Obama administration announced its final guidance.

In 2007, the 9th U.S. Circuit Court of Appeals ruled in favor of the Center for Biological Diversity in its suit against the National Highway Traffic Safety Administration over national gas mileage standards for trucks and SUVs.

The court called NHTSA's reasoning not to include analysis on the benefits of carbon reduction "arbitrary and capricious."

It said NHTSA "cannot put a thumb on the scale by undervaluing the benefits and overvaluing the costs of more stringent standards" and tossed the corporate average fuel economy

standards back to the agency to include values for the reduction of carbon emissions.

Proponents of CEQ climate guidance used that case and others to demonstrate the legal justification for greater consideration of climate in new NEPA rules. Obama's CEQ unveiled its instructions in 2016 after years of consideration.

Even as the prior administration changed its tack, courts still struck down Obama-era NEPA reviews for insufficient climate impact analysis.

Some legal experts balked at the idea that the pared-down Trump guidance would quell judicial disapproval.

Jessica Wentz, senior fellow and associate research scholar at Columbia University's Sabin Center for Climate Change Law, said she doesn't think the guidance will change much because case law is "pretty clear" about the need for greenhouse gas emissions analysis.

"The reality is that when courts are reviewing agency obligations, they're really looking primarily at the statute and the regulations," Wentz said.

"This guidance can't override what's already happened in the court."

Public lands

CEQ's draft guidance follows a string of NEPA-related legal defeats for federal land regulators.

Over the past year and a half, judges have instructed the Bureau of Land Management to try again on Obama-era climate analyses for oil, gas and coal leasing in Montana, New Mexico, Wyoming and Colorado.

The decisions indicate courts are looking for more — not less — climate review for major federal decisions, said Erik Schlenker-Goodrich, executive director of the Western Environmental Law Center, a plaintiff in the Colorado case.

"CEQ knows it's boxed in by NEPA's plain language, existing NEPA rules, and decades of federal court precedent (including more recent precedent specific to climate change)," he said in an email.

"The result? Anemic guidance I expect will just perpetuate chronic federal climate inaction and further render federal agency decisions deeply vulnerable to challenge in federal court."

Other experts maintain the Trump administration's approach will have the opposite effect. Rebecca Watson, a high-level Interior official during the George W. Bush administration, said the CEQ guidance could beef up legal support for slimmed-down climate reviews from BLM and other agencies.

"Courts have historically given CEQ deference as the expert agency on NEPA," said Watson, now at the law firm Welborn Sullivan Meck & Tooley. "It would be difficult for courts to say an agency decision was arbitrary and capricious if it was acting in accordance to the CEQ guidance."

One change Watson said she would like to see in the final guidance document is more clarity on what constitutes a "substantial" amount of greenhouse gas emissions worthy of quantification in a NEPA review.

"That would leave room for opponents in court to come up with their own definitions," she said.

Pipelines

If adopted, the guidance would reflect efforts by federal pipeline regulators to keep their climate reviews narrow.

CEQ's guidance echoes an earlier Federal Energy Regulatory Commission policy reinforced last year that said the climate impacts from downstream use and upstream production tied to the natural gas projects it approves are "generic" and "inherently speculative."

"The reference to 'overly speculative' immediately reminds us of language used by the Federal Energy Regulatory Commission (FERC) in NEPA documents issued since 2017, where it has found that the interconnected nature of the nation's natural gas network renders upstream GHG emissions impacts 'speculative' and therefore of limited utility for the purposes of NEPA," ClearView Energy Partners LLC wrote in a recent note to clients.

Challenges to FERC's approach in the U.S. Court of Appeals for the District of Columbia Circuit have so far failed on procedural grounds, but some judges have signaled skepticism of FERC's approach (Energywire, June 5).

CEQ's proposal, ClearView said, offers FERC a new peg for its policy shift.

"Even prior to finalization, we think that the Draft Guidance could bolster the FERC's narrower view on its GHG reviews under NEPA as it faces judicial review of project permits," ClearView wrote.

Landowner and environmental plaintiffs in the cases are in the process of asking the D.C. Circuit to reconsider their arguments, and similar cases are pending.

Reporter Niina H. Farah contributed.

Twitter: @pamelalauren Email: pking@eenews.net

Return to Top

States

The Denver Post
July 5, 2019

Colorado legislators, electric cooperative want Tri-State to put off move to federal oversight

State lawmakers say in letter they worry move could have negative consequences for ratepayers

By JUDITH KOHLER | jkohler@denverpost.com | The Denver Post

Tri-State Generation and Transmission Association's move to put itself under federal oversight rather than state has prompted Colorado legislators to ask the electric provider to hold off and one of its member cooperatives to seek a court order.

In a July 9-10 meeting, the Tri-State board of directors will consider asking the Federal Energy Regulatory Commission to regulate the association's rates. Tri-State has said FERC would regulate only rates and other state oversight wouldn't be affected.

However, Colorado legislators who sponsored a bill this year that requires Tri-State get approval from the state Public Utilities Commission for its planning have said a utility's rates

and how it plans for the future are connected. A letter sent Wednesday by Senate President Leroy Garcia, House Speaker KC Becker and five other Democratic leaders asks Tri-State officials to delay a vote on the regulatory change “in order to meaningfully review the consequences that this impactful decision will have for Colorado ratepayers.”

The lawmakers said Tri-State officials didn’t tell them about seeking federal oversight while they were working with the legislature on energy bills, “potentially undermining critical parts of the very resource planning oversight it was negotiating.”

The Delta-Montrose Electric Association, one of 18 Colorado rural cooperatives that gets electricity from Tri-State, filed a request Tuesday in Adams County District Court for a temporary restraining order. It wants to prevent Tri-State from taking steps to become subject to federal regulation.

The Delta-Montrose electric association has asked the Colorado PUC to weigh in on its attempt to end its contract with Tri-State to take better advantage of the falling costs of renewable energy resources. Its complaint with the commission says the fee Tri-State wants for severing the contract is unreasonable and discriminatory.

In a statement, Delta-Montrose CEO Jasen Bronec said Tri-State’s sudden announcement that it would pursue federal oversight “is a last-minute effort to undermine the Colorado PUC and prevent it from deciding a fair and reasonable exit charge for” Delta-Montrose.

The decision to seek federal oversight of its rates isn’t connected to the cooperative’s complaint, Tri-State spokesman Lee Boughey said in a statement.

“Each of the four states Tri-State operates in has different rate regulation requirements,” Boughey said. “FERC rate regulation would provide a single point of regulation for Tri-State and its members, as the association moves toward meeting the goals of becoming increasingly flexible and increasingly clean.”

Tri-State considers the view of its members and stakeholders in states where it operates, Boughey said of the Colorado lawmakers’ letter.

“We have met with members of the Colorado legislative leadership to discuss the issue, and we will continue to do so,” Boughey said in an email. “Tri-State has researched and considered FERC rate regulation for some time and approaches the issue with the seriousness it deserves.”

Tri-State, a wholesale electric provider based in Westminster, serves 43 member electric cooperatives over 200,000 square miles and four states — Wyoming, Colorado, New Mexico and Nebraska. It is a not-for-profit governed by a board elected by its members.

The PUC regulates Xcel Energy-Colorado, an investor-owned utility, but previously had an agreement with Tri-State under which the utility shared its plans but didn’t need approval.

However, as the costs of renewable energy have dropped and efforts to cut climate-changing carbon emissions have grown, calls have grown for the PUC to exercise more authority over Tri-State.

Return to Top

S&P Global Platts
July 3, 2019

Significant power market design changes needed to comply with N.Y. climate law: IPPNY

By Jared Anderson

A New York power generator trade group supports exploring the possible implementation of a two-stage capacity market auction similar to ISO New England ’s recently redesigned capacity market , along with other market changes needed to address New York ’s decarbonization goals.

Passage of the Climate Leadership and Community Protection Act into law “confirms that the markets will see an even more substantial influx of state-supported resources than has occurred in the past,” the Independent Power Producers of New York said in comments posted to the New York Independent System Operator ’s website Tuesday.

“The unmitigated entry of subsidized resources will artificially suppress competitive wholesale [Energy and Ancillary Services] E&AS and capacity prices below the levels needed to attract merchant investment,” IPPNY said.

The comments were posted in response to a NYISO draft whitepaper titled “Reliability and Market Considerations for a Grid in Transition” that was released in late May.

The whitepaper considers investigating a structure for the orderly retirement of excess capacity resources paired with the entry of such policy supported resources, similar to the Competitive Auctions with Sponsored Resources construct in ISO-NE .

“Exploration of the applicability of a CASPR like construct in New York is warranted,” IPPNY said, though it noted the CASPR design is largely unproven in New England and would have to be adapted to fit New York ’s power system.

Importantly, IPPNY said a carbon pricing program would be “far preferable” to a CASPR like construct. The NYISO is progressing a plan for pricing carbon dioxide emissions into its wholesale markets .

CASPR in New York

ISO-NE ’s capacity auction held February 4 was the first run under the CASPR rules, which created a secondary substitution auction where resources interested in retiring can trade their capacity supply obligation to new state-sponsored resources that did not clear in the primary auction.

The power generators acknowledged some of CASPR’s positive attributes, but pointed out aspects they say would need to be adjusted.

The benefit of the design is that entry of state-supported resources does not result in further suppression of capacity prices, IPPNY said, but its structure “raises a significant concern” because CASPR replaces retiring megawatts at a 1:1 ratio with new state-supported megawatts, which inhibits capacity prices returning to equilibrium.

“The New York capacity market is significantly long and must be permitted to move closer to equilibrium conditions as a quid pro quo to adopting this rule,” IPPNY said. As a result, so long as the market remains above equilibrium conditions, consideration of a CASPR-like construct in New York “must include applying a MW replacement ratio that is greater than 1:1.”

Under the Climate Leadership and Community Protection Act, also referred to as New York State's Green New Deal, 70% of the state’s power supply must be produced

by renewable power generation by 2030, and the electric power sector must be 100% greenhouse gas emissions free by 2040.

That means over the next 10 years the markets must attract and maintain 10 times the volume of wind and solar power generation than was produced in 2018, according to IPPNY.

“Without properly designed products and competitively priced services that reflect the actual cost of investments, the future of merchant investment through the competitive markets — as well as the competitive market itself — is substantially at risk,” IPPNY said.

In addition to carbon pricing or capacity market tweaks, rule changes that increase E&AS net revenues necessary for flexible resources to be available during periods of tight supply should be implemented as soon as possible, the trade group said.

It also said a new capacity market demand curve proxy unit will need to be selected because the gas turbines that are currently used will not be economically viable beyond 2040 as a result of the climate legislation.

“The NYISO , therefore, should select a peaking plant consistent with the resources that the state has legislated will continue to be permitted to operate in New York ,” IPPNY said. Appropriate candidates would include offshore wind combined with energy storage for the downstate region and onshore wind or solar combined with energy storage for the upstate region, the group suggested.

Return to Top

From: Celeste Miller on behalf of MediaDL
To: NewsDL
Subject: July 22 news clips
Date: Monday, July 22, 2019 8:42:33 AM

DAILY
NEWS CLIPS
OFFICE OF EXTERNAL AFFAIRS
FEDERAL ENERGY REGULATORY COMMISSION

Monday, July 22, 2019 Visit our News Clips website

TOP STORIES

Energy regulators divided over natural gas and climate change
Trump LNG rule: Will it address 'catastrophic' risks?
Heat wave slams the grid. Here's what to know

ELECTRIC

SPP, MISO win approval to streamline interregional grid planning
MISO undergoing steady, persistent decline in coal-fired generation capacity
FERC allows PG&E to keep transmission rate incentive for CAISO membership
Cal-ISO eyes key changes to ease integration of hybrid resources
A few big projects to fuel tripling of U.S. battery storage by 2023—EIA
Environmental Activism Could Lead to Summer or Winter Blackouts in New England
Opening electricity market may lower power bills in Florida. But it'd break up system as we know it.

GAS/LNG/OIL PIPELINES

Landowners ask for court do-over in FERC climate case
US gives Freeport LNG permission to flow gas to first train for commissioning
Venture Global LNG financing now exceeds initial cost estimate for first Louisiana export project
National Fuel Gas applies to FERC for upgrade of Pa. pipeline system
Jordan Cove has underestimated Oregonians
Proposed New Jersey LNG Export Terminal Facing Early Opposition
LNG Limited moving headquarters to Houston, getting listed on Nasdaq

HYDRO

FERC issues new operating license for Colliersville small hydroelectric project
Farm Bureau will host forum on Potter Valley Project, July 24
Premeim's Owens Gorge application deemed deficient

CONGRESS

Hearings to focus on warming costs, decarbonization
Budget deal delayed as negotiations tackle offsets

OTHER AGENCIES

STATES

INTERNATIONAL/MISC.

Top Stories

Axios.com
July 22, 2019
COLUMN / HARDER LINE

Energy regulators divided over natural gas and climate change

Regulatory decisions about America's bounty of natural gas are in the hands of an obscure and understaffed federal agency with a limited mandate to think about climate change.

Why it matters: With America's production of oil and natural gas soaring and Congress not acting on climate change, the once-sleepy Federal Energy Regulatory Commission is finding itself at the center of protests and lawsuits. Interviews with all 4 FERC members illustrate their division over how to handle greenhouse gas emissions.

Driving the news: Democratic FERC Commissioner Richard Glick wants to require companies seeking approval for pipelines and liquefied natural gas (LNG) export terminals to offset significant greenhouse gas emissions, similar to the way companies compensate for more traditional environmental impacts like creating wetlands.

Natural gas is cleaner than coal and oil, but as a fossil fuel it still emits heat-trapping emissions.

The other side: "I just fundamentally disagree with Commissioner Glick on this matter," said Neil Chatterjee, the panel's Republican chairman. "The approach the commission has been taking is what we are statutorily obligated to do."

Where it stands: Chatterjee pointed to the commission's February approval of a gas export terminal, calling it a "breakthrough" because it was the first in two years and because it listed the greenhouse gas emissions associated with the project. (Glick dismissed the move as "window dressing.")

"I've been out there as a Republican from Kentucky and as a Trump appointee talking about climate change and the need to mitigate emissions. And if we can't have a rational conversation about the role that U.S. LNG exports have in reducing global carbon emissions, I don't think we're ever going to get pragmatic solutions in this area."

— Neil Chatterjee, FERC Chairman

Between the lines: The FERC's relatively limited legal authority is in the economic realm and rests largely on two nearly century-old laws — the Federal Power Act and the Natural Gas Act — that aren't environmentally focused.

It's also short-staffed. Normally, it should have 5 commissioners; today it's at 4 and it's about to drop to 3. Democratic Commissioner Cheryl LaFleur is resigning next month (against her will).

LaFleur has struck the most centrist position and often cast the commission's tie-breaking votes. She supports Glick's idea. "Certainly it's potentially within our legal bounds," LaFleur said. "I think ultimately the courts are very likely to decide that."

Indeed, recent court rulings have indicated FERC should do more to contend with the emissions associated with fossil-fuel projects; currently the agency requires most companies to list them but nothing more.

"If you listen to what's going on in the courts, we're going to have to have carbon offsets or something like that at some point soon," said one natural-gas executive who works closely with the agency.

Chatterjee is confident in the FERC's review process for pipelines, which lists the emissions that are "reasonably foreseeable" — a phrase that's subject to multiple legal interpretations.

The other GOP commissioner, Bernard McNamee, agrees: "We need to be careful as an agency...to develop new policies that even Congress hasn't been able to make decisions about," he said.

Reality check: Experts say Glick's idea is unlikely to go anywhere, at least under GOP leadership in Washington.

"It's smart to look at it long-term for risk management, but do I see it as a showstopper now? No," said Christi Tezak, managing director at the nonpartisan research firm ClearView Energy Partners. "Against a majority that doesn't share the opinion and without any legal hook to tether it to, it's elegant rhetoric."

What's next: Once LaFleur resigns at the end of next month, the two GOP commissioners will have a clear majority and be able to approve controversial projects over Glick's opposition.

Return to Top

EnergyWire
July 22, 2019
NATURAL GAS

Trump LNG rule: Will it address 'catastrophic' risks?

Jenny Mandel, E&E News reporter

For years, researchers have warned that stored materials at liquefied natural gas export facilities could pose a risk of catastrophic explosions and potentially be a threat to the public.

But the issue is unlikely to be addressed when the Trump administration publishes a proposed revamp of the regulations governing LNG safety this September, according to industry watchers.

Instead, the upcoming proposed rule from the Pipeline and Hazardous Materials Safety Administration (PHMSA), which oversees LNG facilities, is likely to focus on streamlining U.S. regulations and harmonizing them with those in other countries (Energywire, April 11).

Additionally, a PHMSA-led working group on LNG safety in Baltimore last fall suggested it could take two years to fully assess an "evaluation protocol for non-LNG release hazards," according to a presentation on the agency's research and development priorities. That timeline would put action on the issue far beyond the intended release of updated rules.

"There is no process in place to evaluate the suitability of the software models to calculate these hazards," and work should be done to figure out how to assess the accuracy of such models, attendees at the Baltimore meeting concluded.

The details of the rule could have long-lived safety implications, considering that multiple LNG terminals now on the drawing board in the United States will likely remain in service for decades.

The United States has a dozen LNG import facilities that have been built over decades of domestic natural gas use, but the shale gas boom of the last 10 years has triggered a flurry of development around new export facilities. The first of those, Cheniere Energy Inc.'s Sabine Pass LNG terminal, began commercial operations in 2016, and by the end of this year, five more are expected to be up and running. Another six export projects are fully permitted, but developers have yet to announce plans to build.

The PHMSA rule overhaul comes at the direction of an April executive order, in which President Trump highlighted the complete turnaround in the U.S. LNG industry.

"New LNG export terminals are in various stages of development, and these modern, large-scale liquefaction facilities bear little resemblance to the small peak-shaving facilities common during the original drafting of [the LNG rules] nearly 40 years ago," the executive order said.

PHMSA's mandate for the overhaul is vague, saying only that the regulator should "update" the relevant portion of the federal codes and that the process "shall use risk-based standards to the maximum extent practicable."

While it's uncertain what the agency will do to address explosion risk, it has acknowledged the issue.

PHMSA officials most publicly addressed the question of whether LNG export terminals could pose outsize explosion risks at a May 2016 public workshop held at the Department of Transportation's Washington headquarters.

In a presentation at that meeting, a researcher from the U.K. Health and Safety Laboratory — a British government-affiliated facility with expertise in testing hazardous materials — presented a PHMSA-funded review of incidents in which releases of hydrocarbons like propane or butane led to catastrophic explosions.

The four accidents that were the main focus of that review did not take place at LNG facilities but at gasoline and liquefied petroleum gas storage sides, but PHMSA sponsored the research out of concern that storage of similar materials at a new generation of LNG export terminals in the United States could expose them to similar risks.

Three years after that presentation, PHMSA continues to keep explosion risk analysis on its list of high-priority areas for R&D. Asked last week whether the agency has taken steps to address the knowledge gap, Darius Kirkwood, an agency spokesman, did not respond.

PHMSA officials said they cannot discuss proposed changes to the LNG safety rules before a

draft is released for public comment. But Kirkwood confirmed that materials presented during the 2016 workshop would be considered in developing the proposal.

A key advocate for the LNG industry, the Center for LNG, said through a spokeswoman that its leaders have no inside knowledge of what will be in the upcoming rule proposal.

They declined to comment on the industry's progress in addressing explosion risks.

'Serious hazards to the public'

LNG is natural gas, supercooled to a liquid by chilling it to minus 260 degrees Fahrenheit and then carefully maintaining it at that extreme temperature.

Natural gas, which is made up mainly of methane, will burn, but it isn't considered explosive in open-air conditions. Importing LNG mostly involves taking in tanker-loads of the liquid and bringing it up to temperatures where it turns back into a gas.

Making LNG is more complicated, though, and involves separating out materials like ethane and propane that are present in the natural gas stream and then using refrigerants to cool the gas. All of those materials must be stored on-site at an LNG export terminal, and they bring new hazards that were not in play when the U.S. industry was oriented to imports.

Jerry Havens, a professor emeritus of chemical engineering at the University of Arkansas, developed computer models that LNG regulators used for years to assess certain LNG spill and leak hazards and was among the first to sound the alarm about the explosion risks that could be present at U.S. LNG export facilities.

In public comments Havens filed in 2015 about the Jordan Cove LNG project — an export plant proposed for construction in Coos Bay, Ore. — Havens and another longtime LNG safety researcher, James Venart, wrote that the safety analysis performed for the facility appeared to underestimate the risks posed by having gases other than methane stored in significant quantities on the site.

In the case of an accident, they said, damage could spread from one part of the facility to another and spiral out of control.

"We believe the hazards attending the proposed operations at the Jordan Cove export facility could have the potential to rise, as a result of cascading events, to catastrophic levels that could cause the near-total and possibly total loss of the facility, including any LNG ship berthed there. Such an event could present serious hazards to the public well beyond the facility boundaries," the researchers wrote.

Since then, Havens has only become more concerned that the industry is building a generation of LNG infrastructure that fails to properly account for the risk of a massive accident.

One issue he has raised is that the industry has turned to using tall barrier walls along the edge of their properties that are designed to keep any potential spilled natural gas from drifting onto neighboring lots. Havens sees those "vapor fences," meant to reduce off-site risk, as potentially increasing the chance of an explosion and the resulting damage.

Havens also sees a disconnect between the explosion pressures that LNG terminals' engineering analyses show as worst-case scenarios and the observed results in similar conditions in real life — the issue highlighted by the British safety lab's findings through its research for PHMSA.

Early computational models for LNG safety analysis were open source, allowing the community to pick apart the assumptions they rely on, but Havens said newer computational models are proprietary so he has not been able to dig into why the results are so far from what

he would expect to see. PHMSA has not developed a protocol to evaluate and approve those models, so there is limited opportunity for questions about their accuracy to be addressed.

Based on the historical review and recent work by British regulators to assess the LNG hazard models, Havens believes the current system could underestimate the power of a worst-case accident by a factor of 10.

That could mean safety hazards that extend well over facility lines into public space. "Such overpressures could well lead to destruction of the plant and extend danger to the public outside the controlled boundary," Havens said.

Twitter: **@JennyMandel1** Email: **jmandel@eenews.net**

Return to Top

EnergyWire
July 22, 2019
ELECTRICITY

Heat wave slams the grid. Here's what to know

Jeremy Dillon and Edward Klump, E&E News reporters

While nearly two-thirds of the country sweated through a crippling heat wave over the past week that's been blamed for at least six deaths, the U.S. electric grid remained largely upright even as demand for power soared.

But that reliability did not come without its toll — power outages were reported in places like Long Island, N.Y., and Philadelphia, where 300 residents of a senior center were evacuated Friday as temperatures soared without electricity, according to CBS Philly.

High temperatures can affect the grid, related infrastructure and electricity workers just as much as they do ratepayers at the end of transmission lines. And as a changing climate brings more intense and longer-lasting bursts of extreme temperatures, experts are warning that grid operators will need to pay as much attention to how heat affects the grid as it does the demand from those looking to stay cool.

"The electrical grid handles virtually the entire cooling load, while the heating load is distributed among electricity, natural gas, heating oil, passive solar, and biofuel," wrote authors of last year's National Climate Assessment, including more than a dozen federal agencies and hundreds of leading scientists. "In order to meet increased demands for peak electricity, additional generation and distribution facilities will be needed, or demand will have to be managed through a variety of mechanisms."

Utilities around the country were feeling that strain over the weekend.

In New York, Consolidated Edison Inc. sent out a release urging customers to conserve energy and take measures such as blocking air conditioning vents in vacant rooms. Similarly, Commonwealth Edison in Chicago said it would deploy cooling buses and care vans to provide customers with free water and charging stations in communities that may experience prolonged power outages.

The scorching temperatures also caused misery in Madison, Wis., where two fires at different substations caused a power outage for some 13,000 customers Friday during some of the most intense heat.

Madison Gas and Electric Co. blamed the problem on a mechanical issue at the substation level, noting it did not think it came from increased demand from the heat, although an exact cause was not yet known.

"We have no reason to believe the cause of the fire is due to excessive usage from today's high temperatures," the utility said in a twitter post Friday.

Nevertheless, the Midwest outage revealed the pain felt when infrastructure goes down in the middle of severe heat waves.

Stress on transmission

Intense heat can cause transmission lines to become less efficient. Because of the increase in demand, more energy is running along the wires — when combined with warmer air, that can cause the transmission lines to swell and lead to sagging that topples some of the infrastructure.

"One of the ways heat waves can generate this great stress is because it's kind of coming at the grid from both directions," said Julie McNamara, an energy analyst with the climate and energy program at the Union of Concerned Scientists. "You have this increase demand from all those additional, especially cooling, systems on the line, but you also have the struggling of grid components themselves.

"Every part of the system faces some aspects of these stresses," she added.

Those factors played into a series of cascading events that led to the Northeast blackout of 2003, which affected some 45 million people in the United States during a heat wave in August.

"Because you're getting that increase in demand, any given issue that arises with the infrastructure becomes all the more important if something goes down," McNamara said. "It becomes more significant because there is a lot less slack on the system."

The effects of climate change could make that worse.

Along with issuing transmission infrastructure warnings, last year's National Climate Assessment concluded that demand for electricity is likely to increase across the United States as a result of higher average temperatures and high temperature extremes. Compared with cold snaps that can also stretch the grid to its limits, heat waves offer unique challenges for the grid, the report said.

According to a 2016 **study**, by midcentury (2040-2060), rising air temperatures may reduce summertime transmission capacity by 1.9%-5.8% on average, relative to the 1990-2010 reference period.

That extra load and its corresponding heat could also affect other equipment on the grid, reducing its efficiency and maybe even causing overheating.

Grid operators already take into account those types of external heat stresses, said Paul McGlynn, executive director of system operations with PJM Interconnection, the largest grid operator in the country with a footprint across the Midwest and Mid-Atlantic.

"All of that is taken into consideration for how these facilities are actually rated, and we operate those facilities within those ratings," he said. "As long as you operate it within its design parameters, you shouldn't necessarily have the issues with it."

Grid operators voiced confidence before the most recent heat wave struck.

PJM load demand peaked this weekend at 150,452 megawatts, which would not qualify for PJM's top 10 most summer demand days. The capacity level was set around 170,000 MW for much of the past week.

That total falls in line with last year's peak demand, which was 150,830 MW on Aug. 28. In comparison, PJM's record day for load demand came on Aug. 2, 2006, with 165,563 MW.

Part of that ability to ensure the transmission infrastructure holds up is planning. PJM issued a Hot Weather Alert before the heat wave, which highlighted the upcoming weather for both generation and transmission assets so as to be prepared.

For transmission, that alert put on hold some preventive maintenance work at some facilities while also bringing back online infrastructure that had been out of service.

"It's all hands on deck," McGlynn said. "We work to try and get the system back into normal configuration and get all of our generation, all of our resources, to the extent possible, we try to get those all back and available."

Lessons from Texas

The Electric Reliability Council of Texas, the state's main power grid operator, also is no stranger to coping

with high temperatures.

The system is planned for the highest demand conditions, which in Texas tend to occur in summer afternoons when air conditioners are running, according to Dan Woodfin, senior director of system operations at ERCOT.

Relatively tight summer planning reserve margins for ERCOT have meant extra focus in recent years. That includes seeking to avoid planned transmission outages from May 15 to Sept. 15 this year, Woodfin said.

And while summer weekdays often are a focus, he said there can be tight days on weekends if generating units have been running hard during the week and some need fixes over the weekend.

Woodfin said a transmission line generally is rated to handle a certain flow, and ERCOT seeks to avoid overloads or other problems.

"A lot of what we do is manage the flows on all those transmission lines so that if any transmission line were to trip offline — or any transformer or anything like that — that none of the other lines on the system as the flow is redistributed would be over that rating that generally is based on kind of hot summer conditions," he said.

In some cases, Woodfin said, more expensive generation can be used to help make sure other lines don't overload if a line goes out.

ERCOT has various tools it can turn to under certain emergency conditions, including tapping additional resources and seeking voluntary conservation before rotating outages would be used.

Retailers in the ERCOT region can have their own conservation programs, as well.

Nuclear challenges

Some power generation producers also may need to ramp down power or even shut down for hours or days when severe heat sets in.

That mainly stems from the temperature of the water used in coal and nuclear plants to help cool power production.

From the nuclear point of view, water that is too warm can affect both the water needed to cool the reactor as well as the discharge material coming out the back end, said Nuclear Energy Institute spokesman Matthew Wald.

"You don't want to cook the fish" in the water bodies where nuclear plants release the discharged water, Wald said.

In 2012, rising seawater temperatures forced an unprecedented shutdown of a nuclear reactor on the Connecticut coast (***Greenwire***, Sept. 14, 2012).

Dominion Resources Inc. at the time said it was forced to shutter Unit 2 of its Millstone nuclear plant in Waterford because water being drawn from Long Island Sound was too hot to cool emergency diesel generators and other safety-related equipment.

Wald acknowledged that plant operators reduce power output or go down because of warm water issues "occasionally" but noted plants have largely been able to avoid the problem. In fact, the industry saw record production from nuclear facilities last year in a sign of nuclear's improved power-producing efficiency, he noted.

And no nuclear plants closed during this most recent heat wave.

As noted by NEI's Wald, while air temperatures may feel unbearable for humans, water temperatures take longer to heat up. That usually tends to coincide in the later months of summer, like August and September.

Nuclear plants did have to limit operations last summer in Sweden and Finland over warm sea water concerns during a weeklong heat wave across Europe.

Be it transmission disruptions or generation down periods because of the heat, those hours without power

can have consequences.

"Heat waves are dangerous," said McNamara. "The temperatures present significant health risks across the population, but especially for vulnerable populations, so ensuring there is reliable electricity is so important just to ensure that continued access to cooling."

Reporter Christa Marshall contributed.

Twitter: @JeremyDillonDC Email: jdillon@eenews.net

Return to Top

Electric

S&P Global
July 19, 2019

SPP, MISO win approval to streamline interregional grid planning

By Kate Winston
Platts

The Federal Energy Regulatory Commission has approved changes to the Southwest Power Pool and the Midcontinent ISO's joint operating agreement designed to make building mutually beneficial interregional transmission projects easier.

The decision is significant because it shows that some grid operators are trying to fix planning processes that have failed to spur new interregional grid projects. But some say changes are needed to the underlying federal policy before more progress on interregional grid projects will be made.

In 2011, FERC issued Order 1000 to facilitate interregional transmission planning and encourage competition to build grid projects. So far, the MISO/SPP planning process has not led to any interregional projects.

One key problem is that projects face a triple hurdle of going through a joint modeling process, SPP's planning process and MISO's planning process, the two grid operators told FERC in May.

To address that and other issues, MISO and SPP proposed several changes to their joint operating agreement. Of particular note, the proposal would eliminate the use of a joint model for interregional projects, allow consideration of additional benefits from potential projects, and remove a $5 million minimum threshold for a project to be eligible to be an interregional transmission project.

The American Wind Energy Association, Clean Grid Alliance and Advanced Power Alliance together raised concern that doing away with the joint model would make agreeing on the need for transmission projects and how to allocate project costs harder for the regional transmission organizations.

But FERC on July 16 approved the plan anyway, saying Order 1000 does not require grid operators to create joint interregional models. "We find that the JOA and coordinated system plan processes support coordination between the two RTOs, including the proposed joint review of each region's models," FERC said.

SPP is pleased with FERC's decision and is hopeful that it will lead to more interregional

projects, Derek Wingfield, a spokesman for that grid operator, said July 17.

The revised joint operating agreement includes some definite improvements, such as increasing the frequency of joint planning to at least every two years and getting rid of a $5 million floor for projects, said Steve Gaw, SPP policy director for the Advanced Power Alliance.

But the loss of the joint modeling remains troubling because regional models historically have not contemplated substantial changes in the way power is moved back and forth across the seam, Gaw said. Studies by the U.S. Department of Energy and others have shown benefits from large interregional lines that would enable robust power flows across a much larger footprint, but Order 1000 does not spur that kind of analysis, he said.

"The bottom line is Order 1000 does not, in my opinion, go far enough on regional planning," Gaw said. "We will continue to advocate for changes to Order 1000." (FERC dockets ER19-1895, ER19-1896)

Kate Winston is a reporter for S&P Global Platts. S&P Global Market Intelligence and S&P Global Platts are owned by S&P Global Inc.

Return to Top

S&P Global Platts
July 19, 2019

MISO undergoing steady, persistent decline in coal-fired generation capacity

By Jeffrey Ryser

The Midwestern Independent System Operator has seen 11,198 MW of coal -fired capacity retired and approved for retirement between 2014 and 2019.

The coal retirement capacity number does not include, however, retirements that have been “announced” by utilities or merchant generators who operate 114 coal -fired units in the sprawling MISO territory.

“Unfortunately, announced retirements are a little more complex due to confidentiality,” said Julie Munsell, a spokeswoman for MISO .

According to data compiled by S&P Global Market Intelligence, there have been retirement announcements for 12 facilities that combined have 27 units with 10,357 MW of coal -fired generating capacity. The announced retirement dates for the facilities that are located in Indiana , Michigan , North Dakota and Montana range from 2020 to 2038.

Currently, MISO , with its 10 zones touching 15 states, has 58,490 MW of coal -fired capacity to meet summer peak demand. That is out of a total of 180,520 MW of installed summer peak capacity.

The use of coal -fired generation has been on the decline in MISO . In 2005, coal -fired generation made up 76% of MISO ’s generation stack. Early one evening last week -- at 6:35 pm EDT on Tuesday -- coal -fired generation was 51% of all power generated in MISO . According to the ISO’s recent resource mix projections, it is aiming at coal -fired generation making up 33% of its generation stack in 2024.

In the MISO Planning Resource Auction for Planning Year 2019-2020, concluded in April, a total of 134,743 MW cleared. Of that, 35% or 46,900 MW was coal -fired. Natural gas -fired capacity represented 38% of the power that cleared the auction, with nuclear power at 9%, demand response and hydro at 5% each, and wind and solar with a combined 3%.

Vistra in Zone 4

MISO ’s Zone 4, the only deregulated area within MISO , receives 5,500 MW of power from nine Vistra Energy coal -fired facilities located in Illinois .

The Illinois Pollution Control Board issued an order on June 24 that requires merchant firm Vistra to retire up to 2,000 MW of coal -fired generation located in the state.

A spokeswoman for Vistra in Dallas said Thursday that proposed revisions to the state’s Multi-Pollutant Standard rule, which include the retirement requirement, are now in the hands of the state legislature’s Joint Committee on Administrative Rules. JCAR, as the committee is known, is expected to take up the issue on its August agenda. Once JCAR approves, it will officially be entered in the register and become final.

“Decisions about retirements will be made following the completion of the MPS rule approval process and will be guided by federal energy regulations and market rules, as well as ensuring we comply with the new emissions caps set forth in the new MPS rule,” spokeswoman Meranda Cohn said.

MISO must also give its approval to the plant retirements as well. Vistra’s coal capacity is 40% of Zone 4’s summer capacity.

While Vistra is not discussing which facilities might be retired, there has been some speculation.

There have been three Vistra facilities, all in Illinois , called “likely targets” for retirement. One is the 585-MW E.D. Edwards facility in Bartonville that supplies power to both MISO and PJM . Another mentioned is the 915-MW Coffeen facility south of Coffeen that also supplies power to both MISO and PJM . The third is the 1,185-MW Baldwin facility located in Baldwin, not far from St. Louis, that supplies power just to MISO . Total capacity of the three comes to 2,685 MW.

Vistra also owns six other coal -fired facilities located in Illinois with combined capacity of 3,678 MW. They are the Newton (615 MW), Kincaid (1,108 MW), Joppa (802 MW), Hennepin (294 MW), Havana (434 MW) and Duck Creek (425 MW).

Six utilities announce 10,357 WW of retirements

In late 2018, Northern Indiana Public Service Company, announced it would retire no later than 2023 a total of four units at its Schahfer Generating Station in Wheatfield, with combined capacity of 1,685 MW. It also announced it would retire the 469-MW Unit 12 at its Michigan City facility in 2028.

Earlier in 2018, the NiSource utility retired two coal -fired units at its 604-MW Baily Generating Station in Chesterton.

An Organization of MISO States survey recently released by MISO said Zone 6, which is Indiana , is expected to show “potential market tightness” of power supply in 2024. The OMS went on to say several other zones—including 4 and 7-- could experience tight reserves by as early next year.

Zone 7 is Michigan . In March, Michigan ’s DTE said that by 2022 its 358-MW River Rouge facility, its 536-MW Trenton Channel Power facility and its 1,378-MW St. Clair facility will

be retired.

Return to Top

S&P Global
July 19, 2019

FERC allows PG&E to keep transmission rate incentive for CAISO membership

By Kate Winston
Platts

Responding to a court remand on the issue, the Federal Energy Regulatory Commission July 18 reaffirmed that the Pacific Gas and Electric Co. can continue to receive a transmission rate incentive for continuing its membership in the California ISO. The decision is significant because FERC is reviewing its transmission incentives more generally, and the order deals with one of the more contentious transmission adders.

FERC member Richard Glick, who previously opposed this incentive for another California utility, concurred with the decision. FERC has now fully explained why CAISO membership is voluntary under state law and, therefore, why the incentive has a purpose in motivating ISO membership, Glick said.

Commission policy allows a transmission rate incentive that boosts the return on equity of utilities that participate in regional transmission organizations and independent system operators in recognition of the benefits of such participation and that continuing membership is generally voluntary.

FERC gave Pacific Gas and Electric, or PG&E, a 50 basis-point ROE adder for its participation in CAISO but the California Public Utilities Commission appealed, arguing that state law already required California's major utilities to participate in the CAISO. In 2018, the U.S. Court of Appeals for the 9th Circuit remanded the decision, saying FERC should have given the CPUC a better explanation for why the adder was warranted.

“Awarding PG&E incentive adders was a departure from FERC’s longstanding policy that incentives should only be awarded to induce voluntary conduct,” the 9th Circuit said.

FERC on July 18 reaffirmed its decision to give PG&E the incentive. “Having reviewed the record, including the additional briefing provided by parties to this proceeding, we here find that California law does not mandate PG&E’s participation in CAISO, and that the RTO-participation incentive induces PG&E to continue its membership.”

State law encourages membership in CAISO but does not mandate participation, FERC explained. And under FERC precedent and policy, PG&E’s participation in CAISO is voluntary.

“In light of the voluntary nature of RTO/ISO membership from the commission’s perspective, and the lack of any relevant mandate under California law, we find that PG&E could unilaterally leave CAISO without obtaining CPUC authorization,” FERC said.

Glick noted that while he had dissented from a FERC order granting the RTO adder to Southern California Edison Co., he was concurring with PG&E order. The Southern California Edison order had argued the voluntary nature of RTO membership was irrelevant to whether the RTO adder was fair, Glick noted.

In contrast, the PG&E order did a good job of analyzing the state law’s requirements and

determining that the CPUC cannot compel a utility to stay in CAISO, Glick said. But if the California Legislature changed the law to give the CPUC that authority, he said FERC would have to take another look at the issue.

Glick added that the order highlights the importance of FERC's ongoing review of its transmission incentives policy. "The commission's current approach to incentivizing RTO participation hands transmission owners across the country hundreds of millions of dollars every year with little indication that any of that money makes a meaningful difference in their decisions to enter or remain in an RTO," he said in his concurring statement. (FERC docket ER14-2529, et al.)

Return to Top

S&P Global Platts
July 19, 2019

Cal-ISO eyes key changes to ease integration of hybrid resources

By Kate Winston

Noting the growing roster of hybrid resources in its interconnection queue, California Independent System Operator is floating ideas to help hybrid resources with multiple technologies — like solar and storage — participate in its markets.

The effort is significant because much of the storage capacity seeking to connect to Cal-ISO is co-located with solar , and this type of pairing is viewed as a way to optimize and integrate more renewable energy on the California grid to help meet the state climate goals.

Hybrid resources have grown to comprise about 41% of the capacity seeking to connect to Cal-ISO, the grid operator said. But hybrid resources can pose new challenges for the grid, so Cal-ISO on Thursday launched an effort to address some of these issues before these facilities flood onto the grid.

About 60% of the storage capacity in the Cal-ISO interconnection queue in May was co-located with solar PV , Felix Maire, an analyst with S&P Global Platts Analytics, said Friday. The federal investment tax credit, as well as savings from co-locating equipment, currently provide a competitive advantage for storage co-located with solar PV , he noted. A key consideration for Cal-ISO is whether the storage in a hybrid resource will charge from the grid, the solar PV assets or from both, he said.

Forecasting challenges

Cal-ISO is seeking stakeholder input on a number of questions, particularly whether the components of a hybrid resource should be treated separately for modeling, forecasting, resource adequacy and other purposes, according to a Thursday issue paper. The ISO aims to have a final proposal out sometime next year.

Pairings of storage and intermittent resources pose key challenges, Cal-ISO said. If a hybrid resource has a single resource ID, it loses its ability to participate as an intermittent resource, the paper noted. This is because Cal-ISO could not accurately forecast the output of a solar or wind generating unit due to the impact of the storage resource, Cal-ISO said.

Resource ID options

If a resource loses its status as an intermittent resource, Cal-ISO would no longer provide a 15-minute market schedule and the scheduling coordinator would have to schedule the

resource like a typical generator, the white paper explained. Cal-ISO would also be limited in controlling each component in a hybrid resource with a single ID, the paper said.

“This also demonstrates why CAISO believes it is currently more beneficial for hybrid resources to be configured with multiple resource IDs,” the issue paper said.

In contrast, if the units of the hybrid resource each have individual resource IDs, the renewable unit would still qualify as an intermittent resource and the storage unit would be treated as a non-generator resource, Cal-ISO said. Hybrid resources might also need two resource IDs to qualify as a resource adequacy facility, Cal-ISO said.

Cal-ISO is slated to hold a meeting on the hybrid resource initiative on July 22.

Return to Top

The Energy Daily
July 22, 2019

A few big projects to fuel tripling of U.S. battery storage by 2023—EIA

The Energy Information Administration reported this month that it expects the installed capacity of utility-scale battery storage to nearly triple by 2023, but new installations will remain quite limited—just a few hundred megawatts nation-wide—other than two large systems planned for Florida and New York.

In a report released July 10, EIA said it expects utility-scale battery capacity to grow from about 900 megawatts currently to 2,500 MW by the end of 2030. That would be an acceleration of the already-rapid growth seen since 2014, when total capacity stood at just 214 MW.

However, much of the expected growth through 2023 will come from just two planned installations—Florida Power & Light’s 409 MW battery linked to the Manatee Solar Energy Station and the 316 MW Helix Ravenswood project in Queens, N.Y., both of which are scheduled to enter service in 2021.

Other than that, EIA reports that other planned installations total only about 300 MW nation-wide for the rest of 2019 and 2020, with another 475 MW in 2021 and less than 100 MW in each of 2022 and 2023.

EIA noted that deployment still could grow substantially as new projects get announced. And critics of DOE’s statistics and analytical branch often say that it historically has underestimated the speed and extent of changes caused by disruptive technologies such as battery storage, solar panels and hydraulic fracturing.

In fact, several large battery storage projects linked to solar farms have been announced in recent weeks, including procurements of 600 MW of storage by Nevada-based NV Energy.

Nevertheless, EIA’s forecast of a total 2,500 MW of battery capacity nation-wide through 2023 highlights that storage will have to grow much more if states with goals to reach 100 percent carbon-free power in the coming decades are going to be able to maintain reliability while deploying intermittent renewables at scale.

Hitting the higher levels of renewable generation will likely require deployments of enormous amounts of storage, which has been hindered so far by the high price of lithium-ion and other types of batteries. Battery prices have been falling dramatically, however, as evidenced by the reported low prices of energy from the recently announced Nevada solar-plus-storage projects.

Even so, the batteries continue to face challenges of relatively short output capability, a

limited lifespan and growing concerns over safety, particularly after a recent fire at an Arizona Public Service (APS) battery station highlighted that a surprisingly high number of battery storage units have caught fire in the past few years.

EIA said last week that its forecast assumes no significant retirements of currently operational battery systems—a potentially optimistic assumption given that APS has temporarily taken its battery systems out of service while it investigates the causes of the fires, and some systems installed before 2015 are likely to have seen significant degradation by 2023.

The systems currently in operation or planned remain relatively small, and the costs are still high enough that they are unlikely to be competitive with gas-fired and other generation sources in many parts of the country.

EIA noted that the two largest battery facilities in the country—Golden Valley Electric's in Alaska and the Vista Energy storage system in California—have about 40 MW of capacity each, and only 16 currently operating systems are larger than 20 MW.

NV Energy and others have said their announced solar-plus-storage systems will cut costs for ratepayers and allow the variable renewables to be dispatched through peak demand periods after the sun has set.

"Pairing utility-scale battery storage with intermittent renewable resources, such as wind and solar, has become increasingly competitive compared with traditional generation options," EIA wrote.

The Federal Energy Regulatory Commission's Order 841—which last year directed grid operators to rewrite their tariffs to allow storage systems to participate in wholesale energy, capacity and ancillary services markets—also could spur deployment of batteries in some regions where they had previously been shut out.

To date, the battery installations have largely been the result of supportive state-level energy storage policies. California, which has mandated procurement of several large battery systems, has nearly twice as much capacity as any other state, followed by Illinois and Texas.

Return to Top

Insidesources.com
July 22, 2019

Environmental Activism Could Lead to Summer or Winter Blackouts in New England

by Andrew Cline

Days before a heatwave that sparked a National Weather Service severe heat warning for most of New England, activists protestedoutside the Weymouth, Mass., home of Federal Energy Regulatory Commission member Cheryl LaFleur. They were demanding that LaFleur, an Obama appointee, "vote NO on all new fossil fuel infrastructure."

Environmental activists continue to cite climate change as the reason they oppose construction of new natural gas pipelines in the Northeast. But natural gas has been vital to meeting the region's energy demands.

On June 11th the Pilgrim Nuclear Power State stopped generating its 680 MW of electricity and began the decommissioning process. ISO New England (ISO-NE), the independent

operator of New England's electric grid, forecast that despite the loss, there should be enough available electricity to get through the peak summer season thanks to new generation capacity. While wind and solar will make up about a third of the lost production, the vast majority of new electricity will come from three new plants capable of burning oil and gas contributing 1,185 MW to New England's energy grid.

This growing reliance on natural gas is part of an ongoing trend in the region. According to ISO-NET gas-fired generation on its grid rose from 18 percent of system capacity in 2000 to 47 percent last year, despite the aggressive opposition of climate activists.

According to Robert Bryce, a senior fellow at the Manhattan Institute who studies energy policy, about a dozen Massachusetts towns are now subject to moratoria on new natural gas connections already.

In FERC member LaFleur's town of Weymouth, activists are fighting a proposed new natural gas compressor station to be built by Enbridge Energy. And the day before the approval, 29 state senators sent a letter to the department urging it to reject the station. They cited climate change and public safety as their primary concerns. When the Massachusetts Department of Environmental Protection approved an air quality permit for the compressor station, the news was greeted angrily by the local mayor.

Pressure like this from activists and politicians has hindered new pipeline construction in and to New England. At the same time, ISO New England has warned repeatedly that a shortage of new pipelines puts the region at risk of blackouts during periods of peak energy use.

In January, 2018, ISO New England warned that power plants in the region might not have access to enough fuel during the winter of 2024-25. "Fuel delivery to power plants is limited by pipeline capacity, the logistics of importing liquefied natural gas (LNG) and by winter storms that impede delivery trucks reaching dual-fired power plants when they are running out of oil," the Springfield Republican reported.

"We were one large contingency away from rolling blackouts" that winter, ISO New England President Gordon van Welie told the Associated Press.

"During the unexpected cold snap, much of the natural gas that powers generating plants was diverted to heating homes and electricity providers had to turn to old, coal and oil-fired power plants, which were burning fuel at rates that led officials to fear the fuel tanks could run dry," NBC Boston reported.

Though New England's electricity demand has declined in recent years, peak demand periods in winter and summer continue to see large, sometimes record, spikes. Meeting demand during those times and ensuring a stable supply year-round requires an adequate and readily accessible natural gas supply, ISO New England said in its 2019 Regional Energy Outlook.

"Until electric storage or other technologies have the ability to supply quick energy for longer periods and in greater quantities, flexible natural-gas resources are a necessary element of the hybrid grid, not only to help supply the 'missing energy' when the weather is uncooperative for wind and solar resources, but also to provide the precise grid-stability and reliability services that renewables generally cannot," the report concluded.

"However, natural gas delivery constraints in winter caused by high demand for this fuel from both the heating and electric power sectors can prevent these resources from filling this need during cold weather. The need to meet environmental requirements can also restrict the amount of time natural gas plants that use oil as backup can run."

In other words, demands that all new energy production comes from renewable sources and

that no new fossil fuel capacity be built are putting the reliability of New England's power grid at risk.

Return to Top

Sun Sentinel
July 19, 2019

Opening electricity market may lower power bills in Florida. But it'd break up system as we know it.

By MARCIA HEROUX POUNDS

Imagine electric companies competing on price for your business and being able to choose 100 percent renewable energy such as solar power. That's happening in Texas and some other states, and electricity "choice" advocates are pushing for that change in Florida.

In South Florida, most consumers can only purchase power from Juno Beach-based Florida Power & Light Co., which is the largest electric utility in the state.

Some critics of electric market monopolies — companies such as FPL — say there is a better way.

Citizens for Energy Choices, which supports a constitutional amendment that would mandate consumer choice of electricity providers, contends the state's utility monopolies are preventing Florida consumers from lower electric bills and having more innovative renewable energy options.

If the market were open to competition, "prices would come down. Utilities are no longer in business of being the gatekeeper to solar and alternative energy," said Alex Patton, chairman of Citizens for Energy Choices in Alachua.

But the possibility of "energy choice" on the 2020 ballot has unleashed a storm of protestby Florida's utilities, the state attorney general and senate president, and state business groups. The critics not only object to the amendment being the ballot, they also maintain that electricity industry restructuring could spell disaster for Florida consumers.

The ballot question is before the Florida Supreme Court, which is scheduled to hear arguments in the case on Aug. 28. The question of whether Florida's electric marketplace should be open to competition is a pricklier one.

Competition benefits

The Energy Choices coalition touts the lower electric rates in Texas following that state's deregulation in 2002.

"We're unabashedly copying Texas," Patton said. "It has 144 percent more solar and [electric] prices are lower."

In Texas, consumers go to PowerToChoose.org, put in their ZIP code, and see a choice of electric providers. A check of the site shows 66 plans available for one Dallas ZIP code, for example.

Patrick Wood, who was chairman of the Federal Energy Regulatory Commission from 2001 to

2005 and formerly chaired the Public Utility Commission of Texas, said it is time for Florida and other regulated states to consider a competitive business model for electricity.

“There is going to be a whole rethinking of what electric power looks like because of solar energy and batteries," he said. "The big question in my mind for Florida is, ‘Do you have that run by regulated utilities for next 20 years?’ or, ‘Do you have a more customer-centered model where people can do anything they want?’ ”

Under the choice scenario, FPL and other existing utilities would provide transmission and distribution, which means they would continue to own the lines, wires, poles, and meters in their respective service areas. But utilities would have to divest their power plants.

Electricity then would be sold by new companies competing for consumers. Some of those companies would invest in new more, energy-efficient energy generation for the state as well.

Rich Blaser, founder and CEO of Gainesville-based Infinite Energy, began the quest toward an open electric market in Florida. His company already has 10,000 commercial natural gas customers in the state, and he would like to sell electric power to Floridians as well.

“We would like to enter the market, and many of our competitors would like to enter the market,” Blaser said.

He said NextEra Energy, FPL’s parent, still could sell electricity and build power plants but through a new subsidiary or separate company.

Blaser said NextEra already is selling electricity in other states including Texas. A NextEra subsidiary owns Gexa Energy in Houston. NextEra Energy Services provides electric services in a total of 14 states and Washington, D.C., according to its site.

Patton said if the amendment is passed by voters in the 2020 election, it would prompt the state Legislature to set up a new system that has an independent referee who would choose the most efficient and least costly power at the time.

The proposal "is not deregulation. It’s a restructuring of the market,” Patton said.

Challenges to ‘choice’

Given the choice scenario, it is no surprise that FPL and other major utilities don’t support the amendment. Today, utilities have customers to themselves and a guaranteed rate of return on the plants they build.

“Floridians have access to electricity that is both cleaner and more affordable than the national average. This system would be dismantled under the proposed constitutional amendment,” said FPL spokesman Christopher McGrath.

“This amendment actually would force 75 percent of Floridians to change electric providers whether they want to or not,” McGrath said, referring to customers who currently get power from the big utilities: FPL, Gulf Power, Tampa Electric Co. and Duke Energy.

Critics point to other states that have tried some form of deregulation, and contend it hasn’t worked well in other states.

“The proposed electricity deregulation amendment would completely dismantle Florida’s existing electricity market, increasing electric rates for Florida consumers and businesses, and force us to rely on new, unknown corporations that have no experience or track record dealing with our state’s unique challenges, such as hurricanes," said Tom Feeney, president and CEO of Associated Industries of Florida, in a statement.

On price alone, electric rates in deregulated and regulated states were about the same from

1997 and 2017, according to the federal Energy Information Administration. Yet customers in regulated states saw a slightly higher percentage increase in rates, the agency says.

In Texas, average residential electric prices in deregulated areas have declined more than 23.74 percent during the 10-year period from 2008 through 2017, according to the Texas Coalition for Affordable Power.

Average prices in areas exempt from deregulation, such as Austin, have slightly increased during the same period, the nonprofit says.

Consumer protection?

Patton said all electric companies, whether they're providing transmission and distribution or selling power to consumers, would be regulated by either the state's Public Service Commission or the Federal Energy Regulatory Commission.

Under "choice," a Florida farmer could decide to build a solar field on his land and sell the energy to the grid, for example, he said. Or a business could put solar on its roof, even if it doesn't own the building — a current requirement.

That can't happen now in at least half the state because "FPL controls access to the market," Patton said. "You would have to negotiate a deal to hook up to the grid."

Choice "frees up the market," Patton said. "When utilities no longer control access to the market, the market flourishes."

Despite the benefits of competition, the open-market proposal is not supported by the Tennessee-based nonprofit Southern Alliance for Clean Energy, which has been critical of FPL's monopoly in Florida.

"I'll be the first to admit it's a little ironic given the fight we've had with utilities," said Stephen Smith, executive director. But Smith said he has too many concerns about ensuring consumer protection and addressing issues of climate change to back the choice amendment.

His conclusion after researching Texas and other factors: "There is no guarantee with what we end up with on the other side is going to be better than what we've got now," he said.

A restructured electric system "sounds incredibly simple in the elevator speech, but it is immensely complicated in how you do it."

He said Florida is finally making big strides in solar and he doesn't want to see that disrupted. Hard-won net metering, which allows consumers to receive an energy credit for rooftop solar, could potentially be eliminated in a competitive retail market, he said. But in a deregulated market, there's no guarantee that FPL or another utility would get a return on its investment for a new energy efficient plant.

"So they will stop making investments," Smith said.

He also points to FPL's recent promise to install more than 30 million solar panels by 2030. That's a turnaround in attitude for FPL, which took a hit from backing "Amendment 1" on the 2016 ballot. The amendment seemed to be a pro-solar initiative but was soon exposed as limiting solar on rooftops, and it failed.

Patton contends a more competitive market is what would really spur renewable energy in Florida. He said the state's recent growth in solar didn't occur "until we started pushing competition. Suddenly the utilities react."

Return to Top

Gas/LNG/Oil Pipelines

EnergyWire
July 22, 2019
PIPELINES

Landowners ask for court do-over in FERC climate case

Pamela King, E&E News reporter
Property holders near an Appalachian natural gas transport project have asked a federal court of appeals to take a second look at the Federal Energy Regulatory Commission's role in analyzing greenhouse gas emission impacts.

The landowner opponents of an expansion to Kinder Morgan Inc.'s Tennessee Gas pipeline — also known as the Broad Run project — said Friday that the U.S. Court of Appeals for the District of Columbia Circuit's dismissal of their challenge ran afoul of the court's earlier finding in the 2017 case *Sierra Club v. FERC*. The D.C. Circuit in that case concluded that emissions tied to downstream use of natural gas are reasonably foreseeable impacts under the National Environmental Policy Act.

A trio of D.C. Circuit judges last month knocked FERC's "less-than-dogged" environmental review of the Broad Run project but ultimately tossed the challenge on procedural grounds (***Energywire***, June 5).

"The Panel's willingness to excuse the Commission from an undisputed obligation under NEPA to evaluate the acknowledged indirect downstream effects of a project because of the Commission's claim that it lacked sufficient information to do so affords the Commission and indeed any other federal agency *carte blanche* to circumvent NEPA's requirements simply by refusing to build a record on indirect project impacts," Carolyn Elefant, counsel for the landowners, wrote in a Friday **motion**.

In her request for a full-court rehearing of the Broad Run lawsuit, Elefant noted that the timing of FERC's process around the project precluded challengers from calling for the information the D.C. Circuit later dinged them for failing to request.

"Concerned Citizens *could not* have raised the information-gathering issue on rehearing because at that time, *Sierra Club* had not yet issued, and the Commission simply denied that it had any obligation to evaluate upstream or downstream impacts," Elefant argued on behalf of the landowners, who are referred to as "Concerned Citizens" in court documents.

"It would have made no sense for Concerned Citizens to urge the Commission to gather information on impacts that the Commission denied existed."

In *Sierra Club*, the court found that FERC must either analyze downstream greenhouse gas emissions from the Sabal Trail pipeline or explain why it cannot.

After that ruling, FERC applied full-burn estimates to quantify the indirect emissions from the projects it approved. That changed in May 2018, when the commission's Republican majority said in a procedural document for Dominion Energy Transmission Inc.'s New Market project that *Sierra Club* only applies to projects, like Sabal Trail, that are linked to a specific power plant.

When FERC reached a final decision on Broad Run a month later, Democratic Commissioner Cheryl LaFleur ran an upper-bound calculation for downstream emissions from the project to show that it could be done.

The D.C. Circuit last month tossed a separate suit related to FERC's policy shift.

Otsego 2000, the New York nonprofit that challenged the New Market project because of what it said were inadequate climate reviews, also has filed its own petition for rehearing (***Energywire***, June 24).

The court has yet to decide whether it will revisit that case.

Twitter: @pamelalauren Email: pking@eenews.net

Return to Top

S&P Global
July 19, 2019

US gives Freeport LNG permission to flow gas to first train for commissioning

By Harry Weber

Freeport LNG was given the go-ahead Friday to begin flowing gas to its first liquefaction train for the purpose of commissioning as it prepares to start production at the export facility in Texas .

The terminal south of Houston will be the sixth major LNG export facility — and the last one among the first wave of such facilities — to begin operations in the US when it starts production, after Kinder Morgan said July 17 that liquefaction was underway at its Elba facility in Georgia . There were observable gas flows to all six facilities on Friday, totaling approximately 6.5 Bcf/d, S&P Global Platts Analytics data show.

In a letter to Freeport LNG , the Federal Energy Regulatory Commission said the operator can now introduce hazardous fluids for the commissioning of Train 1 and associated utility systems. It must apply for and receive separate permission to place the unit — one of three being built at the facility — into service.

“In order to demonstrate the progress in testing needed to show that the facilities can safely and reliably operate at or near the design production rate specified in the commission order, Freeport LNG shall file weekly reports on the ongoing commissioning activities once LNG is produced from Train 1 until the commission authorizes commencement of service,” FERC said.

Earlier this month, Freeport LNG held to its expectation that it will have its first commissioning cargo ready to load next month. At the time, no gas deliveries had been observable at the facility since a 10-day surge in May. Within the last week, however, gas flows to the terminal began to ramp up, as other liquefaction equipment was expected to be cooled and commissioned ahead of the commissioning of Train 1.

A spokeswoman said at the time that the expected activity surrounding Train 1 would lead to “ready to load first cargo mid-August and an in service date in September.” Now that Freeport

LNG can flow gas to the train, production could begin in the near future.

The operator's vice president of business development said last month he expected the first commissioning cargo to be shipped in August. Freeport LNG had previously said it expected liquefaction to begin in April or May, with the first cargo ready to load in July. That timing followed several construction- and weather-related delays, including after the facility was significantly affected by heavy rains during Hurricane Harvey in 2017.

Return to Top

S&P Global Platts
July 19, 2019

Venture Global LNG financing now exceeds initial cost estimate for first Louisiana export project

By Harry Weber

Venture Global LNG has secured additional financing commitments that when combined with previously announced capital will more than cover the building and commissioning of its Calcasieu Pass export terminal and TransCameron feedgas pipeline, the company said Thursday without disclosing terms.

The commitments from more than a dozen Asian , European and North American lenders appear to give a significant boost to the developer which, despite its success signing offtake agreements with buyers of the LNG it plans to produce, has faced persistent questions about whether it would be able to pay for construction.

Venture Global estimated in 2014 and 2015 that the 10 million mt/year terminal and affiliated pipeline would cost $4.5 billion. In a statement, the company said the bank commitments raise its total current capital to $8.6 billion, up $5.8 billion from what it had last month when it secured a previous batch of funding from institutional investors.

The financing commitments will allow it to continue full construction and fabrication activity at Calcasieu Pass, Venture Global said. The developer has also proposed two other Louisiana LNG export terminals, the 20 million mt/year Plaquemines LNG and the up to 24 million mt/year Delta LNG . The overall amount of funding commitments, depending on the terms, should allow it to support some of the costs associated with those projects and related infrastructure.

One key issue that was not addressed in Venture Global's statement was some uncertainty about its agreement with its contractor, Kiewit, which is said to be responsible for designing, engineering, constructing, commissioning, testing and guaranteeing Calcasieu Pass. Some analysts have questioned whether the contractor agreement protects it against cost overruns.

The company statement said that its lead financers have arranged for over $10 billion in total commitments, which exceeds the initial cost projections for the terminal and pipeline and the total amount of capital secured.

Calcasieu Pass already has certificate approval from the Federal Energy Regulatory Commission , and has secured long-term offtake contracts with Royal Dutch Shell , Italy 's

Edison , Portugal ’s Galp , Britain ’s BP , Spain 's Repsol and Poland ’s PGNiG .

Return to Top

S&P Global
July 19, 2019

National Fuel Gas applies to FERC for upgrade of Pa. pipeline system

By Brianna Jackson

Market Intelligence

National Fuel Gas Supply Corp. asked the Federal Energy Regulatory Commission for permission to expand and upgrade part of its natural gas pipeline system in Pennsylvania.

In the July 18 abbreviated application, the National Fuel Gas Co. subsidiary asked FERC to issue a Natural Gas Act certificate by August 2020.

National Fuel said the purpose of the FM100 project, part of a multiyear modernization effort, is to address its aging pipeline infrastructure by removing 44.9 miles of 1950s-era steel pipeline and the Costello compressor station. To replace these facilities, the company would build 29.1 miles of 20-inch diameter coated steel pipeline, 1.4 miles of pipeline looping, an extension of an existing pipeline, the Marvindale compressor station and a new overpressure protection station.

National Fuel would also build facilities designed to provide 330,000 Dth/d of additional gas transportation capacity from the Sergeant Township area to an interconnect with the Transcontinental Gas Pipe Line Co. LLC system at Leidy, Pa. The additions would include 0.4 miles of pipe, more horsepower at the Marvindale compressor station and the new Tamarack compressor station. (FERC docket CP19-491)

National Fuel told FERC that Transco would apply for the connected Leidy South expansion project by the end of July. The company also added that together these facilities would create "enhanced access to Marcellus and Utica Shale supplies, which are currently constrained by limited pipeline take away capacity."

In May 2018, Seneca Resources Corp., a National Fuel Gas Co. exploration and production subsidiary, announced it had entered into a firm precedent agreement with Transco for 300,000 Dth/d of transportation capacity. The agreement would allow Seneca to move gas supplies from the Clermont-Rich Valley producing area and its Lycoming County acreage to markets connected to Transco's interstate pipeline system. Under the agreement, Transco will lease about 300 MDth/d of capacity from National Fuel Gas Supply Corp. The FM100 project is related to this effort.

At the time of the agreement, National Fuel Gas Supply Corp. was still completing the

prefiling process with FERC for the FM100 project, which the company expected to cost between $250 million to $300 million.

Return to Top

Mailtribune.com
July 21, 2019

Jordan Cove has underestimated Oregonians

by Deb Evans and Juliet Grable

Pembina Pipeline Corporation, the Canadian company behind the Jordan Cove liquefied natural gas (LNG) terminal and Pacific Connector pipeline, thought it had Oregon pegged. Since inheriting the project from Veresen in 2017, Pembina has taken the attitude of a benevolent benefactor taking pity on a rural, economically depressed region.

On July 5, the comment period on the Draft Environmental Impact Statement (DEIS) for the project ended. Many of the original comments, submitted by state agencies, county commissioners, tribal members, landowners, fishermen, conservation organizations, climate activists and Oregon citizens, pointed out inaccuracies, errors and vague or inadequate statements about how the company plans to mitigate the project's negative impacts. Looks like Pembina has some 'splaining to do.

During an investors meeting in May, Pembina CEO Michael Dilger said he thought Oregon state agencies were "overwhelmed" by the project application for Jordan Cove and Pacific Connector. " they haven't seen billion-dollar projects, let alone billion-dollar hydrocarbon projects," he said. "Their regulators aren't quite capable of this."

In fact, Oregon agencies, including the Department of Geology and Mineral Industries (DOGAMI), Department of Environmental Quality (DEQ), and Department of State Lands (DSL) have consistently pushed the company to supply additional information, correct inaccuracies and supplement vague statements with specific details. In late 2017, DOGAMI submitted comments to the Federal Energy Regulatory Commission (FERC), pointing out "insufficiencies in the scientific and engineering analyses related to geologic hazards." This spring, DEQ denied the project water quality certification, and DSL sent Pembina a nine-page letter requesting additional information. Most recently, Oregon agencies collectively submitted over 200 pages of comments to FERC, stating numerous concerns about the project's safety, environmental consequences and impacts to landowners, and recommending that FERC balance the project's predicted economic benefits with its negative consequences, which include higher domestic natural gas prices and property devalued by the pipeline.

Pembina has sent land agents to ply landowners with ever-increasing offers for easements for the 36-inch pipeline. Some landowners report these agents used underhanded tactics to persuade them to sell: misrepresenting the percentage of easements already secured, declaring that the project was a "done deal," and even threatening some property owners with eminent domain.

Nonetheless, at least 90 private landowners have refused to sign easement agreements. Over the protracted process, several have become skilled organizers and experts on the regulatory process — a great expenditure of time, money and emotional energy. In its information request, the DSL referred to the "substantial comments" of several individuals, many of them landowners, and it was the arguments of landowners that contributed to FERC's denial of the project in 2016.

Before the 2018 election, the company donated heavily to Oregon Political Action Committees (PACs) and to several individual candidates in Coos County. While some elected officials have capitulated, others maintain the project is bad for their constituents. Jackson County commissioners decided the project is not worth the risks, even though the county would receive an estimated $5.3 million annually in property tax revenue from Pembina. In comments to FERC, commissioners summarized their concerns, which include negative impacts to waterways and drinking water wells, the lack of a wildfire mitigation plan, and the use of eminent domain in exchange for no clear public benefits.

In fall of 2018, Pembina launched a multi-million dollar PR blitz. In a blizzard of glossy brochures and deluge of radio and television ads, Pembina presented itself as a friendly "neighbor" blessing southwest Oregon with an environmentally benign project and promising a windfall of jobs.

Most Oregonians saw through the slick messaging. In fact, recent polling shows that opposition to the project across the state, regardless of political affiliation, is stronger than ever. The poll, yet to be released, includes a question about Jordan Cove that is worded similarly to a question from a 2018 poll. While the percentage of those opposing the project held steady at 57 percent, the portion of those who strongly oppose the project grew from 30 to 35 percent. At the same time, support fell from 22 to 19 percent, and only 4 percent say they strongly support the project.

By the time FERC makes its final decision on Jordan Cove next January, Oregon will have been dealing with the threat of this project for 15 years. The protracted process is not only testing our mettle, it is showing us who we are. Whether rural or urban, young or old, conservative, liberal or something in between, Oregonians can't be bought, and we can't be fooled.

Deb Evans is an affected landowner who owns timber property in Klamath County. Juliet Grable is a writer who lives in Jackson County.

Return to Top

Natural Gas Intelligence
July 21, 2019

Proposed New Jersey LNG Export Terminal Facing Early Opposition

Jamison Cocklin

Environmental groups have embarked on a complex effort at various state and federal agencies to stop an affiliate of New Fortress Energy LLC from developing a small-scale natural gas export terminal in New Jersey along the Delaware River.

The Delaware Riverkeeper Network (DRN) has worked in recent months to reveal information about the facility scattered across various agencies that it said wasn't properly shared with the public.

At the DRN's request, the U.S. Army Corps of Engineers on Tuesday reopened a public comment period for the project's permit under Section 404 of the Clean Water Act. DRN is also pushing the Delaware River Basin Commision (DRBC), a quasi-regulatory agency involving four states and the U.S. government that oversees the Delaware River watershed, to reconsider its approval last month of an expansion at the proposed facility. The expansion would enable the transfer of liquefied natural gas (LNG) from trucks to ships for export.

A DRBC spokesman said the commission is currently reviewing that request. Maya van Rossum, who leads DRN, told NGI that the organization is “certainly prepared to go to court” if DRBC doesn’t grant a hearing to reconsider its approval. DRN said the commission violated its governing compact when it approved the project without having more information about the possible impacts.

New Fortress affiliate Delaware River Partners LLC in 2017 requested a waterway suitability assessment from the U.S. Coast Guard, saying in a letter that it wanted to construct a multi-use, deep-water port and logistics center for a variety of uses, including the handling of automobiles, other bulk freight, and LNG and liquefied petroleum gas (LPG). The company told the Coast Guard that the terminal would have an LNG export capacity of 1.5 million metric tonnes/year and an LPG export capacity of 9.6 million bbl/year.

DRN and other environmental groups contend that the company failed to share its plans for LNG at the proposed facility in Gloucester County, which would be called the Gibbstown Logistics Center. DRBC’s initial approval of the project included only plans for LPG export from one dock, van Rossum said.

The Army Corps on Tuesday said it was reopening the comment period so the public could weigh in on additional information included in the notice. The Army Corps said LNG would arrive at the site via trucks carrying 12,000 gallons of product each. The LNG would then be pumped from a second dock to vessels in the port for export. The planned use of railcars to bring additional volumes in has not yet been approved by the U.S. Department of Transportation, the Army Corps said in the public comment notice.

“The other agencies could have, should have known, and at this point they certainly do know,” van Rossum said of the company’s plans for LNG exports. “So, we consider this a classic case of segmentation because now” Delaware River Partners has come back and said “‘now that you’ve approved this, we’re just going to add on this relatively little piece and from this dock we’re going to be doing LNG exports.’”

DRBC spokesman Peter Eschbach said the commission has little control over what the company would handle at the facility. “Generally, DRBC jurisdiction for this project is for the dock construction and the river dredging,” he told NGI. “We don’t have authority over cargo.”

New Jersey Sierra Club Director Jeff Tittel indicated that the company could face more resistance throughout the permitting process as both the state Department of Environmental Protection and FERC must also approve it. DRN has already filed an appeal with the Federal Energy Regulatory Commission over a Freedom of Information Act request for documents about the project that it said wasn’t fulfilled.

New Fortress, which went public earlier this year, is developing two small-scale liquefaction projects in Northeast Pennsylvania that would have a combined capacity of 7.3 million gallons/d, according to a prospectus it filed with the U.S. Securities and Exchange Commission ahead of its initial public offering.

Site work is underway on the first facility in the Marcellus Shale hotbed of Bradford County, with construction expected to start next year. A dedicated tanker truck fleet would transport the LNG to the Delaware River site so that ships can take it to the company’s terminals for distribution, according to the prospectus. The company could not be reached to comment about the project.

New Fortress is focused on introducing LNG in markets that lack access to the fuel. It already operates a 100,000 gallon/d liquefier in Miami and an offshore terminal in Jamaica, along with a fuel handling facility in Puerto Rico. The company had a total of 14 projects under

development at the end of the first quarter, including those in Pennsylvania and others in Ireland and Mexico.

In the Appalachian Basin, small-scale LNG facilities are gaining importance given the natural gas supply glut, especially in rural areas. Northeast LNG exports are also likely to remain flat at about 700 MMcf/d for the foreseeable future as Dominion Energy Inc.'s larger single-train Cove Point export terminal in Maryland is fully subscribed.

Return to Top

Houston Chronicle
July 22, 2019

LNG Limited moving headquarters to Houston, getting listed on Nasdaq

By Sergio Chapa

Australian liquefied natural gas company LNG Limited is moving its headquaters to Houston and getting listed on the Nasdaq stock exchange.

The company's board of directors made the decision during a vote on Monday morning in Australia (Sunday night in Houston.).

Dates for the headquarters move and stock exchange listing depend on the length of regulatory processes in the United States and Australia. LNG Limited already has its principal offices in downtown Houston. The company pledegd to update shareholders as milestones are completed.

"After continued evaluation by the Board and management team and given the Company's confidence in raising new capital to fund our business and marketing efforts, we believe a U.S. re-domiciling is in the company's best interest," LNG Limited Board Chairman Paul Cavicchi said in a statement. "This listing change is expected to benefit LNGL and its shareholders by properly positioning and valuing the Company for future success."

The Federal Energy Regulatory Commission originally permitted the facility to produce 8 million metric tons of liquefied natural gas per year in April 2016 but LNG Limited is seeking permission to boost production by 800,000 metric tons of liquefied natural gas per year.

Efforts to get that approval took a step forward earlier this month when FERC officials issued a notice of intent to prepare a supplemental environmental impact statement for the production capacity increase.

In an updated engineering, procurement and construction contract, LNG Limited estimates that the facility $4.623 billion and is based on 8.8 milllion tons per year at a cost of $525 per ton.

Founded in 2002 and headquartered in Sydney, Australia, LNG Limited has its principal offices in Houston.

With little revenue until it has working projects, LNG Limited posted a $5.5 million loss during the first quarter but maintains more than $19.8 million in cash reserves.

Return to Top

Hydro

Power Engineering

July 19, 2019

FERC issues new operating license for Colliersville small hydroelectric project

By Elizabeth Ingram

The Federal Energy Regulatory Commission has issued a new operating license to Goodyear Lake Hydro to continue operation and maintenance of the 1.4875-MW Colliersville Hydroelectric Project

The original license for this small hydro project, on the Susquehanna River in Milford, Otsego County, N.Y., was issued March 13, 1979, and expired Feb. 28, 2019. The new license has a period of 40 years, effective July 1, 2019.

The project consists of a 200-foot-long, 35-foot-high reinforced-concrete Ambursen-type dam; a 364-acre reservoir with a gross storage capacity of 7,800 acre-feet at normal pool elevation; a 550-foot-long reinforced concrete power canal; a 103-foot-long by 33-foot-wide reinforced concrete powerhouse containing two turbine-generator units; a tailrace; and three 4.16-kV underground generator leads to an adjacent substation owned by the New York State Electric and Gas Corporation.

Goodyear Lake Hydro operates Colliersville as a run-of-river facility. Average annual generation is 5,985 MWh.

FERC found that as licensed with the mandatory conditions and staff measures, the levelized annual cost of operating the project is $65.72/MWh. Based on an alternative power cost of $49.86/MWh, the project will cost $15.86/MWh more than the likely alternative cost of power in the first year of operation. However, FERC said, “Although our analysis shows that the project as licensed herein would cost more to operate than our estimated cost of alternative power, it is the applicant who must decide whether to accept the license and any financial risk that entails.”

Return to Top

Mendocino Voice
July 18, 2019

Farm Bureau will host forum on Potter Valley Project, July 24

By Adrian Fernandez Baumann, Managing Editor |

MENDOCINO Co., 7/19/19 — The Potter Valley Project, which moves water from the Eel River, south into the Russian River, and is a vital source of water for farms and cities from Potter Valley down to Marin County, is changing hands — and the Farm Bureau will be holding a meeting July 24 to explain exactly where things stand.

The project was built in the early 20th century, and consists of two dams, Lake Pillsbury, a hydro-electric power planet, and a tunnel through a hill north of Potter Valley. It is currently owned and operated by Pacific Gas & Electric, but PG&E has decided not to seek a new license for the project from the Federal Electrical Regulatory Commission (FERC), and so the license was up for grabs. Then a few weeks ago a consortium of governments, agencies and a non-profit, stepped into, and declared their intention to file for the application. The group includes the Mendocino County Water Agency, the Potter Valley Irrigation District, the

Russian River Flood Control District, the City of Ukiah, and the Redwood Valley Water District — along with Sonoma's water agency, Humboldt County and the environmental non-profit CalTrout. This group is now in the process of creating some regional water agency, likely a "joint powers authority" or special district, to purchase, license and manage the project. This in turn will require the legislature to take some actions.

All of which is...a lot of moving parts. But thankfully, the Farm Bureau will be holding a special meeting where people can get some clarification and answers about just where this process stands.

The free event will be held July 24 at the Ukiah Valley Conference Center from 6 p.m. to 8 p.m. Space is limited so registration is required: contact the Mendocino County Farm Bureau at 707-462-6664 or by email at director@mendofb.org.

You can also read more about the Potter Valley project in our archive.
Return to Top

Sierrawave.net
July 21, 2019

Premeim's Owens Gorge application deemed deficient

By Deb Murphy

Remember Premium Energy Holdings and its wacky pumped storage project applications? Bless their hearts, they keep trying and failing.

The latest notice from the Federal Energy Regulatory Commission, the licensing authority for hydroelectric projects added to Premium's list of deficient preliminary permit application.

This project involved two new dams in the Owens River Gorge in Mono County. The list of deficiencies includes the absence of physical composition, dimensions, general configuration and other information on existing or proposed infrastructure as well as the same detail on the existing Crowley Lake reservoir, owned and operated by the Los Angeles Department of Water and Power, which has been proposed as an upper reservoir alternative.

Assuming Premium can come up with the missing information, the Walnut company can fill in the blanks and keep this application alive for the time being.

Return to Top

Congress

E&E Daily
July 22, 2019
CLIMATE

Hearings to focus on warming costs, decarbonization

Nick Sobczyk, E&E News reporter

Lawmakers will hold a series of climate change hearings this week, a couple of which will likely be overshadowed by former special counsel Robert Mueller's high-profile appearance on Capitol Hill.

The Mueller spotlight will be a test for House Democrats struggling to accomplish something

on climate beyond appropriations riders, many of which will likely get dropped in negotiations in the Senate.

Two separate hearings in the Budget Committee and the Select Committee on the Climate Crisis will address the cost of climate change and offer both parties a chance to strut their talking points.

Democrats have tried to keep the focus on how climate effects like sea-level rise can damage the U.S. economy and threaten billions of dollars in assets. But Republicans usually counter that by discussing the Green New Deal, the nonbinding Democratic resolution that the GOP says, misleadingly, will cost $93 trillion.

The Budget panel will meet Wednesday, on the same morning as Mueller's appearance, for its second hearing this year on the costs of climate change.

It will feature an official from Unilever, the multinational consumer goods giant, as well as two retired rear admirals who have been involved with the military's efforts to adapt to climate change — Rear Adm. Ann Phillips, who's now special assistant to the governor of Virginia for coastal adaptation and protection, and Rear Adm. David Titley, now the director of the Center for Solutions to Weather and Climate Risk at Pennsylvania State University.

Phillips has been especially involved with sea-level rise issues in Hampton Roads, which is home to the world's largest navy base — Naval Station Norfolk — and is suffering from the dual threats of climate change and land subsidence.

Also on Wednesday morning, the Energy and Commerce Subcommittee on Environment and Climate Change has scheduled a hearing titled "Building America's Clean Future: Pathways to Decarbonize the Economy."

On Thursday afternoon, the select committee will have its own discussion on the costs of climate change, with a specific focus on businesses.

It's the second hearing this month for the panel, which will also head out to Colorado Democratic Rep. Joe Neguse's district for a field hearing at the beginning of August.

Meanwhile, this afternoon, Rep. Lizzie Fletcher (D-Texas) will host a field hearing on hurricane resilience in her Houston district, which is still recovering from the deluge brought by Hurricane Harvey in 2017.

The House Science, Space and Technology Subcommittee on Environment meeting will feature a pair of scientists, including National Weather Service Director Louis Uccellini.

Lawmakers will focus on how to improve disaster resilience through research, a bipartisan area of interest with Congress grappling with increasingly expensive natural disasters.

Schedule: The Budget Committee hearing is Wednesday, July 24, at 10 a.m. in 210 Cannon.

Witnesses:

Georges Benjamin, executive director, American Public Health Association.

Stefani Millie Grant, senior manager for external affairs and sustainability, Unilever.

Retired Rear Adm. Ann Phillips, special assistant to the governor for coastal adaptation and protection, Office of the Governor of Virginia.

Retired Rear Adm. David Titley, affiliate professor of meteorology and of international affairs, Department of Meteorology and Atmospheric Science, Pennsylvania State University.

Rich Powell, executive director, ClearPath.

Schedule: The Energy and Commerce subcommittee hearing is Wednesday, July 24, at 10 a.m. in 2123 Rayburn.

Witnesses: TBA.

Schedule: The select committee hearing is Thursday, July 25, at 2 p.m. in 2261 Rayburn.

Witnesses: TBA.

Schedule: The Science subcommittee field hearing is Monday, July 22, at 4 p.m.

Witnesses:

Louis Uccellini, director, National Weather Service.

Hanadi Rifai, director, Hurricane Resilience Research Institute, University of Houston.

Emily Grover-Kopec, director, insurance practice, One Concern Inc.

Jim Blackburn, professor, Department of Civil and Environmental Engineering, Rice University.

Twitter: @nick_sobczyk Email: nsobczyk@eenews.net

Return to Top

E&E Daily
July 22, 2019
APPROPRIATIONS

Budget deal delayed as negotiations tackle offsets

George Cahlink, E&E News reporter

Congressional negotiators and the White House are hoping to reach an accord before the House leaves for summer recess at the end of this week that would raise both discretionary spending and the nation's debt ceiling.

The lead negotiators, Treasury Secretary Steven Mnuchin and Speaker Nancy Pelosi (D-Calif.), both said late last week they were close to an accord that would lift automatic budget cuts, known as sequestration, due to hit in 2020 and 2021.

They also are in agreement on raising the nation's debt ceiling, which is due to be hit in September.

"I think we're closer than we ever have been," Senate Appropriations Chairman Richard Shelby (R-Ala.) said last week, adding he believes congressional Republicans would get behind whatever deal Mnuchin can negotiate.

Discussions were focused on finding ways to offset the costs of spending increases over the next two years that could reach $150 billion.

The White House is likely to offer up proposals for mandatory cuts, including to Medicaid and student loans, that were part of its budget request, but Democrats are seen as unlikely to back them.

Another option could be to simply delay the sequester by a few years rather than rescind it, a move that could allow lawmakers to argue they will make up for the increased spending with future cuts.

Lawmakers also could return to a familiar source of offsets in recent years: tapping the Strategic Petroleum Reserve (E&E Daily, July 19).

As the nation has become a leading energy exporter, there's some support for selling off a portion of the hundreds of millions of barrels stored along the Gulf Coast, while others insist the SPR is a hedge against fluctuating energy prices.

Pelosi had said a deal was needed over the weekend for the House to move it before leaving for August recess Friday, although there are ways the chamber could quickly move the package if an accord emerges in the coming days.

The Senate, meanwhile, does not leave for its summer break until Aug. 2.

If lawmakers can reach an overall budget agreement, Congress will race to finalize fiscal 2020 spending for agencies before the new fiscal year begins Oct. 1.

Without that, stopgap spending measures would be needed to keep agencies running come the new fiscal year, and a government shutdown would not be off the table.

Twitter: @GeorgeCahlink Email: gcahlink@eenews.net

Return to Top

E&E Daily
July 22, 2019
DOE

Committee to vote on energy research legislation

Jeremy Dillon, E&E News reporter

Legislation to boost research and development spending for renewables and carbon capture technologies within the Department of Energy is set to advance to the House floor this week when the House Science, Space and Technology Committee holds a full committee markup Wednesday.

The bills are part of the Democratic response to helping address climate change by infusing more research and development money into technologies critical to reducing carbon emissions from the power sector.

In total, the three bills related to energy technology would authorize nearly $7 billion in new annual spending during the next five fiscal years, representing a 33% to 36% increase from current levels.

The legislation moved out of the Energy Subcommittee two weeks ago on a voice votes despite some Republican hesitation with the new spending levels.

Chairwoman Eddie Bernice Johnson (D-Texas) argued the bipartisan support of the bills proved how essential a clean energy future was to the country.

"The research paths we set forth today, such as those laid out in these bills, will be essential to helping us achieve our climate change mitigation and adaptation goals while ensuring that every American has access to low cost, reliable electricity," she said during the subcommittee markup.

Leading the agenda is a bill, H.R. 3607, from Reps. Marc Veasey (D-Texas) and Conor Lamb (D-Pa.), that would reauthorize DOE's Office of Fossil Energy for the first time since 2005.

With a funding level eventually reaching just over $1 billion by fiscal 2024, the legislation would set pathways for new research ventures in direct air carbon capture and methane leak detection on natural gas infrastructure.

The bill would also expand carbon capture research programs related to a variety of industrial sources.

The other measures on the docket include two bills related to renewable energy research within DOE's Office of Energy Efficiency & Renewable Energy.

Both bills would look to expand the scope of the research activities to include ways to increase the durability and sustainability of wind components, especially for offshore, and ways to boost domestic manufacturing of solar panels and other parts. They are:

H.R. 3597, from Rep. Ben McAdams (D-Utah), deals with solar energy and would set a $270 million funding authorization level in fiscal 2020, reaching $328 million by fiscal 2024.

H.R. 3609, from Rep. Paul Tonko (D-N.Y.), deals with wind power and would set a $104 million authorization level in fiscal 2020, eventually rising to $126 million.

Separately, the panel is voting on H.R. 335, from Rep. Brian Mast (R-Fla.), to the federal government to develop an action plan to address harmful algal blooms in South Florida.

Schedule: The markup is Wednesday, July 24, at 10 a.m. in 2318 Rayburn.

Twitter: @JeremyDillonDC Email: jdillon@eenews.net

Return to Top

Other Agencies

E&E NewsPM
July 19, 2019
CLIMATE

White House extends comment period for NEPA guidance

Niina H. Farah, E&E News reporter

The Council on Environmental Quality is pushing back its deadline for comments on draft guidance for considering greenhouse gas emissions under the National Environmental Policy Act.

Members of the public will now have until Aug. 26 to submit comments on the proposal. The original comment period was set to expire July 26.

A pre-publication notice in the Federal Register said CEQ made the change in response to public requests for more time to comment.

The draft guidance provides federal agencies with parameters for how they should consider emissions for major federal actions, such as the construction of pipelines and roads. The Trump administration has had no overarching guidelines for considering greenhouse gas emissions in these projects since the president repealed Obama-era guidance in 2017.

That has led to agencies taking divergent approaches to calculating the potential impact of federally funded projects.

The long-anticipated draft has been criticized for allowing federal agencies to narrow the scope of emissions considered in environmental impact analyses and for not offering agencies specific tools for how to go about counting both direct and indirect project emissions (Greenwire, June 25).

Twitter: @niina_h_farah Email: nfarah@eenews.net

Return to Top

S&P Global Platts
July 19, 2019

Trade groups urge DOE to fight FCC plan seen as threat to utilities' networks

By Jasmin Melvin

A coalition of major trade groups challenging a Federal Communications Commission proposal they say would threaten grid reliability and heighten outage risks by opening up a wireless communications band heavily used by utilities to unlicensed use has turned attention to the Department of Energy to help ensure that grid operations are protected.

US airwaves known as spectrum are the invisible infrastructure needed for wireless services. The FCC launched a proceeding in October to consider allowing unlicensed operations on the 6 GHz spectrum band.

The American Public Power Association, American Water Works Association, Edison Electric Institute, National Rural Electric Cooperative Association, Nuclear Energy Institute and Utilities Technology Council told DOE in a July 16 letter that the proposed FCC rule "would likely cause significant reliability concerns" for the electric , natural gas and water sectors.

UTC President and CEO Joy Ditto added in a statement Friday: "The FCC has a choice to make — it can choose to protect these critical infrastructure industries that rely on this band for essential functions, or it can choose to add an unnecessary and unacceptable risk to these communications."

Mission-critical operations

Impacted infrastructure would include power plants, electric transmission lines, water and gas pipelines, control centers, substations and other energy and water assets, all of which deploy private communications networks for their mission-critical operations.

"Often overlooked, these networks provide critical situational awareness, underpin safety functions, and enable crews to safely repair and restore services after storms," the trade group letter noted. "In addition, these communications networks support the greater deployment of distributed energy resources, smart meters and other technologies to enable the more flexible grids associated with the transition to the utility of the future."

At risk, for instance, are teleprotection systems that prevent power line faults from escalating and causing damage to other equipment on the grid or power outages.

The threat of radiofrequency interference brought on by unlicensed use of the airwaves at issue could force power and gas companies into a costly, multi-year rebuild of parts of their networks, the trade groups asserted.

The proposed rule is part of the FCC's broader objective to ensure there is adequate spectrum to accommodate the proliferation of connected, wireless devices often referred to as the internet of things.

While energy stakeholders acknowledged in the letter "the importance of using spectrum more

efficiently to meet our nation's growing wireless needs," they have argued that other spectrum exists that could be opened to support the unlicensed operations envisioned by the FCC without undermining the ability to provide electricity that supports "the very devices and services the FCC wishes to expand."

Jump on the bandwagon

With a key senator and members of the Federal Energy Regulatory Commission recently expressing concern over the proposal, the trade groups urged DOEto jump on the bandwagon and "hold a public conference or, at the very least, encourage the FCC to ensure that its final rule contains adequate, tested, and proven measures to protect the [critical-infrastructure] industries which power our ways of life."

Senate Energy and Natural Resources Committee Chairman Lisa Murkowski, Republican-Alaska , sent a letter to FCC Chairman Ajit Pai June 14 asking whether and how the telecom regulator consulted with FERC and other energy stakeholders on the proposal.

FERC tackled the issue during a session of its annual reliability technical conference June 27. The discussion with energy, wireless and technology industry representatives highlighted different spectrum needs and tolerance for interference. FERC Commissioner Bernard McNamee went as far as to suggest a disconnect between the energy and communications sectors over the concept of reliable service.

A DOE spokesperson confirmed receipt of the trade groups' letter and said the department was aware of the FCC proposal. "We appreciate input from our stakeholders and plan to respond to them through the proper channels," the spokesperson said in an email Friday.

"It is becoming clear that members of Congress and FERC are recognizing the criticality of utilities' communications networks to the reliability and resilience of the grid," Ditto said. "We are hopeful that their attention to this matter will put the FCC on notice that their actions will have consequences on critical infrastructure of all types, from electricity , water, and natural gas to public safety."

Because of the importance of the information being transmitted in the 6 GHz band, use of these airwaves has been limited to license holders, providing a high level of protection against radiofrequency interference and a clear path for resolving potential interference from other licensees.

Mitigation solution untested

"Due to the criticality of these networks, electric utilities cannot tolerate even the slightest risk that these communications systems could be degraded, as diminished situational awareness can result in degraded electricity reliability," the trade groups' letter to DOE said. "Having continued interference-free access to this licensed spectrum ensures greater reliability and resilience."

As drafted, the proposed FCC rule would mitigate interference to incumbent licensees through an automated frequency coordination (AFC) system.

"Unfortunately, the FCC's AFC system is unproven and untested, and even those who support the concept cannot guarantee it will prevent harmful interference consistently and reliably," the groups told DOE .

These concerns have been echoed by the public safety sector, which uses the 6 GHz band as backhaul of 9-1-1 dispatch and first responder radio communications.

Return to Top

The Energy Daily
July 22, 2019

Delay in federal review threatens leading U.S. offshore wind project

| BY ERIC LINDEMAN

Interior Department officials last week stunned the developer of the Vineyard Wind project by delaying their environmental review of the nation's most advanced utility-scale offshore wind project, seriously jeopardizing its plan to qualify for the soon-to-expire federal renewable energy production tax credit, a critical factor in its financially viability.

Interior's Bureau of Ocean Energy Management (BOEM) informed Vineyard Wind of the indefinite delay of the final environmental impact statement (FEIS) on the project July 11—one day before the decision was expected.

Vineyard Wind, a joint venture of Connecticut-based Avangrid and Copenhagen Infrastructure Partners, responded by warning that the future of the 800 megawatt project offshore Massachusetts would be at risk if BOEM failed to approve the FEIS within six weeks.

Notably, the developer did not specifically raise the issue of losing the 2.5 cents per kilowatt-hour (KWh) production tax credit (PTC) due to Vineyard Wind's potential inability to begin construction by the end of this year, when the PTC is scheduled to expire. However, the developer indicated the project would not be able to proceed as currently planned unless BOEM acts soon.

"Vineyard Wind has communicated to BOEM that for a variety of reasons, it would be very challenging to move forward the Vineyard Wind project in its current configuration if the final EIS is not issued within, approximately, the next four to six weeks," the developer said in a statement Thursday.

"BOEM has indicated they understand the reasons for this constraint and will communicate this to the secretary of the interior [David Bernhardt], who is responsible for final action on this project. Vineyard Wind has also communicated to the secretary directly about its concerns regarding the delay."

The developer said it had received assurances from the Trump administration that the FEIS delay was not aimed at hurting the project, although it provided no further details.

"Through all of our communications with government officials, it has been made clear to us that there was no intention to prevent the Vineyard Wind project from moving forward," it said.

"Vineyard Wind notes that it is not unusual for there to be ongoing review of an EIS as it makes its way through the internal approval process, especially for a project of this significance. The National Environmental Policy Act requires an EIS to consider all best available information, which we believe BOEM has done. We are therefore confident that any remaining reviews can be concluded and an FEIS released soon after."

However, in a statement to Commonwealth Magazine last week, BOEM spokesman Steven Boutwell said the agency was well within its two-year review window to complete its analysis of the project, meaning the bureau could take until March 30, 2020, to decide on the FEIS.

BOEM Thursday confirmed Boutwell's statement and declined to comment further.

BOEM's delay on Vineyard Wind is mysterious because Interior officials under the Trump

administration have repeatedly trumpeted their support for offshore wind, launching initiatives to speed leasing for turbine arrays in federal waters.

At the same time, Vineyard Wind as the nation's most advanced utility-scale offshore wind farm raises a multitude of precedent-setting issues about impacts on the ocean environment, fisheries and federally protected marine animals, particularly the critically endangered right whale, which has key habitat in New England waters. Thus, evaluations and mitigation decisions made in the FEIS for Vineyard Wind are likely to affect multiple other offshore wind projects now proceeding along the Atlantic Seaboard.

That being said, fossil energy industry groups close to the administration have vehemently opposed the PTC and other federal renewable energy incentives as unfair and unwise. Further, the Koch brothers, a primary backer of those groups, detest offshore wind and were responsible for financing opposition to the now defunct Cape Wind project offshore Cape Cod, Mass.

Vineyard Wind officials said only that BOEM told them July 10 that bureau officials are "not yet prepared" to issue an FEIS for the offshore wind project, which is launching Massachusetts' first-in-the-nation effort to build offshore wind. Vineyard Wind was chosen by Massachusetts officials last year to implement a 2016 state clean energy law that directed the Massachusetts Department of Energy Resources (DOER) and the state's three investor-owned electric distribution utilities to conduct a massive procurement to buy up 1,600 MW of offshore wind.

Vineyard Wind needs to start construction this fall to meet all of its contractual obligations and qualify for the PTC, and is scheduled to be operational in 2021.

Vineyard Wind spokesman Scott Farmelant last week did not address the PTC in discussing the issues raised by BOEM's unexpected delay.

"Vineyard Wind has specific contractual obligations with the Massachusetts [utilities] to deliver offshore wind generation in a certain amount, by a certain date and at a certain price," Farmelant told The Energy Daily. "So these obligations require hundreds of millions of dollars in contracts with manufacturers and construction companies for work to be done by a certain date. For the company to make initial payments for work to proceed under those contracts, our U.S. investors need time to evaluate risk."

DOER and the state's three distribution utilities—National Grid, Eversource Energy, and Unitil—along with an independent evaluator, picked Vineyard Wind in May 2018 in the state's first solicitation for 400-800 MW of offshore wind. Massachusetts utility regulators subsequently approved 20-year power purchase agreements (PPA) under which Vineyard Wind will supply the utilities at a price of about 6.5 cents per KWh—below the state's current average wholesale electricity rate of 7.9 cents per KWh. However, the price includes the benefit of the PTC.

Massachusetts Gov. Charlie Baker (R), who has touted the low-priced PPAs as a sign of the success of Massachusetts' offshore wind effort, did not respond to requests for comment last week on BOEM's delay.

Return to Top

States

The Energy Daily

July 22, 2019

Ohio House tees up final vote on nuke aid bill

The Ohio House is expected to give final passage to legislation to aid FirstEnergy Solutions' nuclear plants in an August 1 session that was planned after the chamber failed to send the measure to the governor in a late-night session Wednesday.

House leaders told local reporters late Wednesday that the House would probably reconvene August 1 to try again for a simple majority vote to approve the Senate's version of the bill and avoid a full-scale conference committee. The Senate approved the legislation Wednesday evening.

House leadership had hoped to hold the final vote Wednesday but a handful of needed supportive lawmakers were absent.

Gov. Mike DeWine (R) has indicated he is likely to sign the bill, which would give $150 million in annual ratepayer subsidies to prop up the Perry and Davis-Besse nuclear plants, which FirstEnergy Solutions has threatened to close because they are struggling to compete with subsidized renewables and plants burning cheap shale gas. The bill would also provide $20 million annually to aid solar plants in Ohio.

Return to Top

The Energy Daily
July 22, 2019

DTE gets regulatory approval for biggest Michigan wind buy

In the biggest wind generation buy in the state, Michigan regulators Thursday approved DTE Energy's purchase of three wind projects totaling 455 megawatts, but deferred action on future wind farms proposed by the utility due to questions about their cost-competitiveness.

The Michigan Public Service Commission (MPSC) said the three approved wind projects will provide savings for ratepayers because they are under construction and will be built in time to qualify for the full 2.5 cents per kilowatt-hour federal renewable energy production tax credit.

DTE will buy the Isabella 1 and 2 projects totaling 383 MW, which are to be completed by developer Apex Clean Energy by November 2020, and the 72 MW Fairbanks Wind Park from Heritage Sustainable Energy, which is to start up in October 2020. The utility said they will serve corporate green energy demand.

DTE also has proposed building hundreds of megawatts of additional utility-owned wind plants after 2020. However, the MPSC said DTE failed to prove the company-owned wind projects to be built in 2021 or later would—without the full federal tax credit—be cost-effective compared to "alternative sources of renewable generation and ownership models."

The commission deferred action on those later projects, saying DTE would have to show they would be cost-competitive with wind purchases from merchant developers.

The regulators also made their approval of the three near-term wind projects conditional on DTE agreeing within 14 days with the requirement to show its later wind farms would be priced competitively.

A DTE official indicated to The Energy Daily that the utility will agree to the MPSC's condition.

Return to Top

The Energy Daily
July 22, 2019

New Hampshire court backs ruling against Eversource line

BY JIM DAY

In a ruling that appears to kill the project, the New Hampshire Supreme Court last week rejected Eversource Energy's bid to overturn a state regulatory committee's February 2018 decision to deny a license for the utility's long-planned Northern Pass transmission line, which was to bring Canadian hydropower into New England power markets.

Eversource had twice failed in its efforts to persuade the New Hampshire Siting Evaluating Committee (NHSEC) to reconsider its unanimous rejection of the project, and the state Supreme Court Thursday disagreed with the utility's contentions that the NHSEC's review was unfair and inappropriate.

Notably, New Hampshire Gov. Chris Sununu (R), who had been one of the project's most ardent supporters, appeared to throw in the towel Friday when he tweeted: "It's time to move on."

Northern Pass once was the most advanced initiative to carry huge amounts of Canadian hydropower into New England; it was initially selected by Massachusetts to supply the state's three distribution utilities to implement a state law requiring Canadian hydropower purchases to meet aggressive clean energy targets.

However, after the adverse NHSEC decision, Massachusetts dropped Northern Pass and shifted to Central Maine Power's competing New England Clean Energy Connect (NECEC) line to bring in the required hydropower.

In its decision, New Hampshire's high court dismissed Eversource's arguments that the NHSEC failed to adequately consider important information about the potential benefits of the $1.6 billion power line, including what Eversource said would be $1.5 billion in savings delivered to the region's wholesale electricity markets. The court also knocked down Eversource's arguments that the committee improperly determined that Northern Pass would undermine the orderly development of the region and represented improper ad hoc decision-making.

"The [NHSEC] subcommittee's findings could reasonably be made based on the evidence presented," the court wrote. "The subcommittee made detailed findings regarding the credibility of the witnesses and the sufficiency of the evidence."

Overall, the court found that the NHSEC had adequately considered each of the many contentious issues that arose in its review of the Northern Pass project, including its balancing of the potential benefits of lower electricity prices and job creation against local governments' and landowner concerns about impacts on property values, the environment and the towns' planning goals.

On Friday, Eversource said it was "deeply disappointed" with the Supreme Court's decision, adding: "This outcome is an unfortunate setback to our efforts to advance an affordable clean energy future for our customers."

The NHSEC's initial decision against Northern Pass caught Eversource by surprise, in part because the project was backed by Sununu. The governor said he was "stunned and disappointed" by the committee's ruling the line would interfere with the orderly development

of the region. He also said it was a mistake “to deny 1,100 megawatts of clean, renewable energy and more than 1,000 jobs for New Hampshire.”

Nevertheless, the NHSEC declined to reconsider its decision on the project, which has faced strong opposition for years from some local governments, landowners and conservation groups over potential negative impacts on the environment and tourism due to its 190-mile route across the state.

Beyond the court’s decision, Northern Pass appears dead because the alternate NECEC line chosen by Massachusetts has moved forward.

The 1,200 MW line to import power from Hydro Quebec won approval in April from the Maine Public Utilities Commission after Central Maine Power and the Canadian utility reached an agreement with officials under Maine Gov. Janet Mills (D) and green groups to provide funding for other clean energy initiatives.

And Massachusetts regulators last month approved power purchase agreements between the state’s three investor-owned distribution utilities and Hydro Quebec to deliver 1,000 MW of hydropower over the NECEC.

However, the NECEC still faces opposition in Maine as it seeks to nail down key environmental permits.

As for New Hampshire, Sununu on Friday said it was time for the state to turn to other clean energy alternatives. “The court has made it clear—it is time to move on,” he said. “There are still many clean energy projects that lower electric rates to explore and develop for New Hampshire and the rest of New England.”

Officials in New England, New York and in the upper Midwest are looking to import Canadian hydropower as a key element of their efforts to reduce greenhouse gas emissions. But the demise of the Northern Pass line underscores how difficult it has been to site the transmission lines needed to carry that power, although the NECEC line and Minnesota Power’s 880 MW Great Northern power line to tap into Manitoba hydropower appear to be advancing steadily.

Return to Top

SWtimes.com
July 21, 2019

SWEPCO adding 810 megawatts of wind power

By Times Record Staff

Southwestern Electric Power Co. (SWEPCO), an American Electric Power company, recently announced plans to add 810 megawatts (MW) of wind energy by 2022. That’s enough energy to power about 200,000 homes. This proposal supports SWEPCO’s long-term plan of significantly increasing its use of more environmentally friendly energy sources, such as wind and solar, a news release states.

In filings submitted this week, SWEPCO seeks approval of the proposal from utility regulators in Arkansas, Louisiana and Texas. The proposal is also subject to review by the Federal Energy Regulatory Commission (FERC).

“Our long-range plan moves SWEPCO toward a cleaner energy future with more low-cost, renewable energy as part of our diverse energy mix,” said Malcolm Smoak, SWEPCO president and chief operating officer. “Along with the environmental benefits, this additional wind energy will save customers money for years to come, helping families, businesses and the local economy.”

SWEPCO’s long-term strategy calls for more than one-third of the energy required by customers to be generated from wind and solar resources. Under this long-term plan, coal-fueled generation drops from 83% to 44% of the company’s resource mix. Wind energy increases from 9% to 26%, and solar is introduced and grows to 10%. Natural gas grows from 7% to 19%.

“Our customers want cleaner energy,” Smoak said. “Many have renewable energy and sustainability goals of their own, and this addition of wind energy to SWEPCO’s resource mix will help them meet those goals.”

Under SWEPCO’s proposal, customers will save an estimated $2 billion over the 30-year expected life of the wind facilities.

SWEPCO is pursuing its proposal to acquire three Oklahoma wind generation facilities in conjunction with its sister company, Public Service of Oklahoma (PSO). The portion of the wind generation allocated to each state may be adjusted depending on regulatory approvals. The projects were identified through a competitive bidding process. One of the projects is projected to be completed by the end of 2020. The other projects will be completed by the end of 2021.

SWEPCO currently serves customers with 469 MW of wind energy under power purchase agreements.

Return to Top

S&P Global Platts
July 19, 2019

New Hampshire Supreme Court rejects Eversource's appeal of denied permit for power line

By Andrew Coffman Smith, S&P Global Market Intelligence

The New Hampshire Supreme Court has upheld the denial of a state siting permit for Eversource Energy 's proposed 1,090-MW Northern Pass power line, potentially killing for good the hydro -backed transmission project nearly nine years after it was first proposed.

In a July 19 ruling, New Hampshire 's highest and sole appellate court denied Eversource's appeal of the February 2018 decision by a subcommittee of the state Site Evaluation Committee, which denied a permit for the proposed 192-mile power line that sought to deliver emissions -free Canadian hydropower to Massachusetts .

Eversource subsidiary Northern Pass Transmission failed to show that Northern Pass would not harm the economy, specifically tourism and real estate values, or "unduly interfere with the orderly development of the region," the subcommittee reasoned.

Penning the unanimous decision by the state Supreme Court's five judges, Associate Justice Anna Barbara Hantz Marconi said the subcommittee's decision was supported by the evidence and not erroneous as a matter of law. "Accordingly, we hold that the petitioners have not

sustained their burden on appeal to show that the subcommittee's order was unreasonable or unlawful," said the court.

"We did it!" proclaimed the jubilant No to Northern Pass activist group on Twitter. "#NorthernPass is dead!"

In a statement, Eversource expressed deep disappointment with the ruling. "Northern Pass was the most advanced project to bring abundant low-cost, clean energy into the region, and this outcome is an unfortunate setback to our efforts to advance an affordable clean energy future for our customers," said New England 's largest utility.

Eversource has 10 days to ask the court to reconsider the decision but said it is still reviewing the ruling and weighing its options. Nonetheless, Eversource said it remains steadfast in the belief that the need for new energy sources in New England is "greater than ever."

"We remain focused on innovative solutions that will lower costs for our customers, improve reliability and advance clean energy," Eversource said.

Bowing to pressure from landowners and conservationists, Eversource had previously tweaked plans for Northern Pass by proposing to bury 60 miles of the proposed power lines underground to preserve scenic views of the White Mountains. The Northern Pass project would have run 158 miles as a direct current line from the Canada -US border through New Hampshire to a proposed converter terminal in Franklin, New Hampshire . From there, as a 345-kV alternating current line, the project would have continued another 34 miles to a substation in Deerfield, New Hampshire .

The $1.6 billion project was designed to transmit Canadian hydropower generated by provincial utility Hydro -Québec and originally was chosen by electricdistribution companies in Massachusetts as the winning bid in a solicitation for cleaner energy. But the siting committee's unanimous rejection of the siting permit application, formally issued in March 2018, led to Massachusetts ' three utilities contracting with an alternative transmission project instead.

Return to Top

International/Misc.

EnergyWire
July 22, 2019
PEOPLE

Ex-EPA, Hill aide to lead hydro group

Hannah Northey, E&E News reporter
Malcolm Woolf, a former Senate staffer and EPA lawyer, has been tapped to lead the National Hydropower Association, the nation's largest nonprofit representing hydropower and marine energy.

NHA announced today that the group's board of directors had chosen Woolf to serve as its next CEO and president.

Woolf has a long resume in the energy world, serving most recently as managing director of MW Energy Advisors, a consulting firm in Washington that provides energy and environmental consulting and advocacy services to businesses, nonprofits and government organizations.

He also served as senior vice president of policy and government affairs for Advanced Energy Economy

from 2007 to 2012 and as the Cabinet-level director of the Maryland Energy Administration for five years under Maryland Gov. Martin O'Malley (D), according to his LinkedIn profile.

From January 2004 to August 2006, Woolf served as senior counsel on the Senate Environment and Public Works Committee. Before that, he was senior counsel from May 1997 to January 2002 at EPA. Woolf has a law degree from the University of Virginia.

Woolf in a statement said that he was excited to take the group's helm just when the electricity grid needs the "clean, flexible power provided by America's first renewable resource" and that "with the right mix of energy, environmental and market policies, hydropower can contribute even more than the approximately 102 GWs of capacity currently on the grid."

According to NHA, the hydropower industry provides 39% of the nation's renewable generation and 7% of overall electricity generation, while pumped storage projects provide 95% of energy storage in the United States.

Email: **hnorthey@eenews.net**

Return to Top

From: Celeste Miller on behalf of MediaDL
To: NewsDL
Subject: June 7 news clips
Date: Friday, June 07, 2019 8:30:28 AM

DAILY NEWS CLIPS

OFFICE OF EXTERNAL AFFAIRS
FEDERAL ENERGY REGULATORY COMMISSION

Friday, June 7, 2019 Visit our News Clips website

TOP STORIES

Court: Climate Impacts of Pipeline Projects Cannot Be Ignored

ELECTRIC

FERC pauses GreenHat order to PJM to iron out 'multiple complexities'
US FERC looks to provide PJM guidance on GreenHat default fallout through paper hearing
Ninth Circuit rules it can't make NorthWestern pay higher PURPA rates for solar facilities
PJM analysis shows significant market savings if nukes retire, replaced with gas
Dispatchable New England wind and hydro incorporated into day-ahead market
5 things the wind industry is watching

GAS/LNG/OIL PIPELINES

Cheniere's plan to add third LNG berth at Sabine Pass lands US Coast Guard support
Project to export LNG from Delaware River terminal in New Jersey faces headwinds
Observers see global LNG market as saturated, difficult for newcomers to enter
Firm to reapply for permits to build Northeast gas project
Dep Denies Permits For Natural Gas Pipeline Under Raritan Bay
New Jersey denies water permits for natural gas pipe to New York
New Jersey rejects permits for Transco pipeline expansion offshore New York City
Transco Expansion Faces Another Roadblock as New Jersey Denies Permits
NJ deals another setback to new gas pipeline to LI, NYC
N.J. just blocked a controversial pipeline in Raritan Bay
Opponents of NEXUS pipeline argue land was improperly seized
Gas companies hire ex-Hill aides

CONGRESS

Lawmakers introduce bills to bolster storage, modernize grid
Every Senate Dem signs on to Paris bill — except Manchin

OTHER AGENCIES

PHMSA sidesteps key safety rules in proposed reauthorization bill
WOTUS review stumps advisers: 'The science isn't right'

STATES

California ISO plans quick fix for EIM cost redistribution issue
ERCOT's monitor proposes fixes on reliability issues, CRR markets, transmission
Texas creates cybersecurity monitor for power grid
Psst. PG&E's top leaders expected in Paradise and Chico, but post-wildfire tour is secret

INTERNATIONAL/MISC.

American LNG exports threatened as China turns to Russian sources

Top Stories

Climateliabilitynews.org
June 6, 2019

Court: Climate Impacts of Pipeline Projects Cannot Be Ignored

By Karen Savage

The Federal Energy Regulatory Commission, a little-known agency that oversees energy infrastructure, receives far less attention when it comes to climate change than the Environmental Protection Agency. But a recent court ruling upheld that it must consider climate impacts in its decisions to approve certain natural gas infrastructure, hindering Trump administration efforts to speed construction on those projects with no regard to their impact on the climate.

The ruling, issued Monday by the District of Columbia Court of Appeals in Lori Birckhead et al v. FERC, emphasized that FERC must consider greenhouse gas emissions during its review process of fossil fuel projects. The court upheld that the commission is obligated by law to follow the National Environmental Policy Act (NEPA), which states that FERC must consider the "environmental and related social and economic effects" of a proposed project and disclose them to the public.

It added another court defeat to the Trump administration's attempt to roll back regulation of the energy industry. The administration has been appointing industry-friendly commissioners to FERC's five-member panel with the goal of approving more infrastructure, such as compressor stations and pipelines, with little to no regard to their climate impacts.

Perhaps most controversial was the nomination and approval of Commissioner Bernard McNamee, who formerly represented fossil fuel companies. McNamee drew sharp criticismduring the nomination process for having said that carbon dioxide is "not a real pollutant" and fossil fuels are "key to our way of life."

Despite Trump's efforts, other appointees, including Neil Chatterjee and Richard Glick, have veered from the administration's views on climate change. And the new ruling shows that courts will hold the agency accountable to its responsibilities under NEPA.

"This decision should be taken by FERC as a warning shot that its climate approach is incompatible with NEPA and that it needs to adopt a fulsome consideration of upstream and downstream emissions or it's eventually going to find its approach knocked down at the court," said Gillian Giannetti, an attorney with the Natural Resources Defense Council, who was not involved in the lawsuit.

The new ruling actually ruled against the environmental group challenging FERC's approval of a part of the Broad Run Expansion Project near Nashville, but while the court declined to

reverse the approval, it clarified a 2017 climate change-related ruling issued by the same court in Sierra Club v. FERC, which reversed approval of a different pipeline, Sabal Trail.

In that decision, the court said “downstream greenhouse gas emissions were a reasonably foreseeable” effect of the Sabal Trail project and should have been considered during the approval process.

FERC interpreted that to mean it was required to consider downstream emissions only when the applicant knows where the gas would be burned, such as a pipeline that is built specifically to serve a power plant or other facility. In all other cases, FERC took the position that it was not required to consider emissions.

Upstream emissions occur before the natural gas reaches the proposed pipeline infrastructure and downstream emissions occur after it leaves.

The most recent decision could also reverse the Commission’s declaration last year that it would not consider most greenhouse gas emissions during the approval process. In that announcement, FERC said it would limit consideration and public disclosure of impacts caused by upstream and downstream greenhouse gas emissions, because it was not required under NEPA. It also upheld its approval of the New Market Project, an upgrade to Dominion Energy’s natural gas infrastructure in New York.

Experts and environmental groups had anticipated the court would clarify the Sierra Club/Sabal Trail ruling during an appeal of the New Market decision, but last month, the D.C. Circuit denied the appeal on standing without considering FERC’s responsibility on greenhouse gas emissions and climate change.

That clarification came this week, in the Birckhead/Broad Run appeal, when the court said FERC “must consider not only the direct effects, but also the indirect environmental effects” during the NEPA review process.

Prior to the ruling, FERC maintained that it cannot consider greenhouse gas emissions because the project applicants do not provide FERC with that information. The Commission also said it did not need to consider greenhouse gas emissions from facilities outside its jurisdiction.

Both contentions were rejected by the court.

“Although the Commission asserts that the project applicant itself is unlikely to possess the needed information, we are skeptical of any suggestion that a project applicant would be unwilling or unable to obtain it if the Commission were to ask for such data as part of the certification process,” the court wrote in its ruling, adding that when it asked an attorney for Tennessee Gas, the applicant in the case, what it would have done if the commission had asked for that information, he said the company would have provided it.

“When the regulator asks us questions, we generally answer them as promptly and completely as possible,” the attorney said.

Commissioner Cheryl LaFleur, appointed to FERC by President Obama, quickly calculatedemissions during the Birckhead/Broad Run hearing in April, demonstrating how easy it is to consider emissions once FERC has the appropriate data.

Giannetti said the decision clearly states it is FERC’s legal responsibility to consider climate change in its decisions and must disclose, calculate and analyze the reasonably foreseeable greenhouse gas emission effects of its projects.

“In terms of steps for advocates, this case is immediately applicable to projects that came after the [SierraClub]Sabal Trail decision because it says, albeit maybe as an aside, that FERC’s

interpretation and limitation of that case to its facts is wrong and that has been the basis of a lot of its denials or refusals to analyze climate in a more robust manner," said Giannetti.

Like LaFleur, Commissioner Richard Glick has also been vocal in his belief that FERC should consider climate change in its approval process.

Glick, who was appointed to the commission in 2017 by President Trump, has written dissenting opinions on several recent FERC decisions to approve natural gas projects and has said the commission is operating in violation of its mandate under NEPA.

FERC has "fallen short of its statutory obligations to consider the impact of its actions and climate change," particularly in its permitting of certain types of natural gas infrastructure, Glick and his advisor Matthew Christiansen wrote in an article published last month in the Energy Law Review.

"Although the Commission is not a climate regulator, like the EPA, the scope of its statutory responsibilities means that its decisions will inevitably affect the nation's greenhouse gas emissions, and, therefore, climate change," Glick and Christiansen wrote.

Giannetti said she hopes FERC re-evaluates its decision to limit the consideration of greenhouse gas emissions as outlined in the New Market decision.

If that doesn't happen, FERC could find itself inundated with appeals. Giannetti said that helps no one.

"It doesn't help the project developers, it leaves legal limbo for FERC, it obviously doesn't help the people who are directly affected by the project, and no one benefits from these cases being dragged out for years," said Giannetti, adding that by the time a court rules, some projects are already built and in service.

Glick and Christiansen wrote that the urgent threat of climate change does not necessitate a wholesale reinterpretation of FERC's responsibilities or a novel regulatory approach.

"Instead, climate change increases the stakes of many Commission actions, making it all the more important that the Commission carry out its existing obligations."

Return to Top

Electric

The Energy Daily
June 7, 2019

FERC pauses GreenHat order to PJM to iron out 'multiple complexities'

BY GEORGE LOBSENZ

Granting a reprieve desperately sought by PJM Interconnection and a host of affected parties in the grid operator's Mid-Atlantic and Midwest markets, the Federal Energy Regulatory Commission this week agreed to consider testimony on "multiple complexities" raised by its February order to PJM on resolving the titanic default by GreenHat Energy on millions of dollars of money-losing financial transmission rights.

Responding to a slew of rehearing and clarification requests filed by PJM, state officials, utilities and other PJM market participants, the commission Wednesday also launched settlement proceedings in hopes that all parties can agree on a solution to PJM's GreenHat

debacle before the agency has to revisit the matter—thus extricating FERC from what has become an increasingly painful situation for all concerned.

FERC's ruling relieves an enormous amount of pressure on PJM, which has acknowledged multiple mistakes that opened the door to GreenHat, a thinly capitalized Texas trading firm, to default on a FTR portfolio totaling 890 million megawatt-hours over PJM's 2018/2019, 2019/2020 and 2020/2021 planning years.

The GreenHat default has resulted in horrendous costs to PJM's 992 members, and industry sources said anger among PJM members and its board of managers about the fiasco played a role in the announcement by PJM last month that its CEO would retire.

A PJM spokesman Thursday indicated the grid operator would seek to resolve its GreenHat problems through a settlement rather than more FERC proceedings.

"We're pleased that the commission set the matter for settlement, and we are hopeful that we will reach a resolution of the issues," he said.

If the settlement talks do not bear fruit, FERC said it would proceed with a paper hearing to hear complaints about its January 30 order directing PJM to re-run a July 2018 FTR auction in which the grid operator sought to minimize losses to its members from the default by deviating from its normal auction procedures. PJM at that time also revamped its FTR auction process for subsequent months, again to minimize losses.

Following the July 2018 auction, PJM filed a request with FERC for a tariff waiver that would retroactively bless the revamped auction process and allow similar changes to subsequent auctions so the grid operator could more slowly liquidate GreenHat's mammoth FTR portfolio.

PJM said it needed the tariff waiver in light of the substantial losses incurred when it began liquidating GreenHat's portfolio in the July 2018 auction. The grid operator froze the auction before it was completed after watching initial liquidation costs soar on alarmingly thin liquidity; it then instituted changes to more slowly unwind GreenHat's positions over the following months, saying the delay would reduce losses to its market members by tens of millions of dollars.

PJM said the slower sell-off would prevent buyers of GreenHat's positions from unfairly benefiting from the enormous leverage they would hold under the fire sale that otherwise would be required under PJM's existing tariff.

But while FERC was aware of the huge potential costs to PJM members if it did not grant the tariff waiver, the commission refused to do so, saying in a January 30 ruling that changing the rules would be unfair to participants in PJM FTR auctions dating back to July.

And citing the lone protest filed to PJM's waiver request by Apogee Energy Trading LLC, FERC said PJM's request did not meet FERC requirements that such tariff waivers be limited in scope—especially since PJM was looking to change the rules for its July 2018 auction after it had already begun.

"Changing the rules governing an already-commenced auction is a significant step that affects both the outcome of that particular auction as well as parties' confidence in the rules governing future proceedings," FERC said in the January order. "That is particularly so here, where the record indicates that PJM proposed the waiver in order to avoid the outcome that the already-commenced auction would have produced."

FERC ordered PJM to rerun the July 2018 auction to replace the results of its altered auction. It also directed the grid operator to unwind settlements made for GreenHat's September,

October, November, December and January positions that FERC said should have been liquidated sooner under PJM's tariff.

After FERC rejected the waiver request, a pained PJM estimated the commission's decision would raise GreenHat costs to its members from an estimated range of $250-300 million to at least $430 million.

Not surprisingly, PJM quickly asked FERC to reconsider its ruling, and dozens of PJM market participants as well as state regulators and ratepayer advocates followed up with similar requests. They pointed not only to the huge additional losses that market participants and utility ratepayers would suffer under FERC's ruling, but said re-running the July 2018 auction and undoing the settlements for the following months inevitably would result in multiple additional tariff violations by other market participants that bought or sold FTRs in the revamped auction process used by PJM last year to resolve the default.

"The commission is left in the position to decide between granting a waiver that it dislikes and imposing potentially hundreds of millions of dollars of additional costs on PJM members while having to address many additional violations or waivers of other tariff provisions," Shell Energy said in a March rehearing request to FERC on its GreenHat order. "The least worst option at this point in time is to grant the waiver."

FERC declined to go that far in its Wednesday reconsideration order, but acknowledged the multiple complaints by PJM and market participants that its order would effectively force a range of inadvertent tariff or technical FTR violations by parties that followed PJM's lead by participating in its revamped auction process.

For example, FERC noted that PJM expressed concern that if it followed FERC's order to re-run the July 2018 auction and undo FTR deals in subsequent months, the grid operator could "potentially oversubscribe some FTR paths, creating retroactive violations of the Simultaneous Feasibility Test in the July auction; and…potentially push subsequent month auction results into retroactive Simultaneous Feasibility Test violations, as a consequence of interactions between the revised July auction results and the later month auction clearing solutions."

PJM sought FERC clarification on that issue as well as other retroactive actions ordered by FERC that PJM said would drag various FTR market participants into difficulties and confusion not of their making.

"PJM requests that the commission provide clarification in order to reconcile the tariff requirement that market participants can sell only FTRs they own," the commission said.

"PJM states that, after re-running the July auction, some market participants will no longer own FTRs they thought they did. PJM argues that the FTR ownership rule will be violated to the extent these market participants offered to sell positions that they no longer own in subsequent auctions. PJM states that some of the 1,782 bilateral FTR trades since the July auction may have involved FTRs that would no longer exist after re-running the July auction."

Faced with such head-scratching problems, FERC said it would take testimony on a way out of the mess.

"The issues raised in the PJM motion for clarification and the subsequent answers demonstrate that there are multiple complexities associated with implementing the [GreenHat] directive that should be addressed in a paper hearing where all parties will have an opportunity to present written evidence and argument," it said.

However, the commission delayed the paper hearing for at least 45 days—and said it would

allow further extensions—in hopes the settlement talks would bear fruit and the hearing would no longer be needed.

Return to Top

S&P Global Platts
June 6, 2019

US FERC looks to provide PJM guidance on GreenHat default fallout through paper hearing

By Jasmin Melvin

Acknowledging the complexity associated with implementing an order prompted by the fallout from a significant default in PJM Interconnection ’s financial transmission rights market , the US Federal Energy Regulatory Commission launched a paper hearing to address issues the grid operator said required clarification if it were to proceed with the agency’s directives.

The paper hearing, which will be held in abeyance to grant parties more time to potentially settle their disputes, comes as FERC continues to weigh several requests for rehearing of its January 30 denial (ER18-2068) of a temporary waiver of certain FTR auction rules in connection with GreenHat Energy’s June 21, 2018, default.

“We ’re pleased that the commission set the matter for settlement, and we are hopeful that we will reach a resolution of the issues,” PJM spokesman Jeff Shields said in an email Thursday.

PJM began liquidating GreenHat's large volume of FTR positions in the August 2018 planning period balance FTR auction, which was held in July 2018, but the substantial boost to FTR clearing prices and the financial hit it posed to PJM members led the grid operator to halt the liquidation process. It sought a waiver July 26, 2018, to liquidate only the prompt month of GreenHat's portfolio over the next four monthly FTR auctions, and advanced that plan ahead of a FERCruling.

Ultimately, PJM let the portfolio consisting of positions for the 2018-19, 2019-20 and 2020-21 planning years go to settlement. Default allocation assessments have reached $108.3 million for GreenHat positions held through April 2019.

Full liquidation

FERC 's January 30 order rejecting the waiver directed PJM to unwind settlements for GreenHat’s September-January positions and reinstate the results of the auction held in July to reflect the full liquidation of GreenHat's portfolio, as required by PJM 's tariff at the time.

PJM has said this would force market participants to absorb another $250 million to $300 million in default allocation assessments.

The grid operator on February 21 requested a stay of the January order pending commission action on its subsequent February 26 request for rehearing, or alternatively clarification, of the waiver denial.

A Wednesday order took up PJM ’s alternative motion for clarification seeking guidance on the January order’s directives.

That motion sought clarification on six different matters as PJM asserted that re-running the auction held in July could “oversubscribe some FTR paths, creating retroactive violations of the simultaneous feasibility test in the July auction; and potentially push subsequent month auction results into retroactive [SFT] violations.”

FERC said Wednesday that the issues raised in the motion highlighted “multiple complexities associated with implementing the waiver order directive that should be addressed in a paper hearing where all parties will have an opportunity to present written evidence and argument.”

Settlement talks

While the paper hearing is limited to the motion for clarification, FERC said the scope of settlement talks while the hearing is held in abeyance should expand to all issues arising from the waiver proceeding.

But if an agreement cannot be reached in the next three to four months, termination of the settlement procedures would start a 60-day clock for parties to file briefs on the motion, with reply briefs due 30 days thereafter.

The Wednesday order, in which Commissioner Bernard McNamee did not participate, also denied motions for late intervention in the proceeding filed by a slew of power suppliers, energy traders , state utility regulators and state consumer advocacy offices.

The parties at issue claimed “they were not aware of how a denial of the waiver request would impact them,” but FERC rejected that explanation as insufficient “to meet the higher burden to show good cause for granting intervention following a dispositive order.”

Return to Top

Utilitydive.com
June 6, 2019

Ninth Circuit rules it can't make NorthWestern pay higher PURPA rates for solar facilities

AUTHOR

Catherine Morehouse@cmorehouse10

Dive Brief:

A three-judge panel under the Ninth Circuit Court of Appeals on Monday ruled they could not force the Montana Public Service Commission (PSC) to order NorthWestern Energy to purchase power from solar developers at previously set contract prices.

Solar developers filed an appeal with the federal court after the Federal Energy Regulatory Commission (FERC) ruled against the PSC's suspension of rates guaranteed to small solar projects under the Public Utilities Regulatory Policies Act (PURPA), but said they couldn't intervene at the state level. Those developers argued that because the utility locked them out of contracts when prices were $66/MWh, they are owed those rates, rather than the current $22/MWh, which a commissioner was caught on video saying would kill small solar projects.

But the PSC said that because they have updated their policies surrounding those contracts, the commission has no responsibility to mend any damages incurred from its unlawful rate freeze. And the court ruled the dispute should be taken care of by the state, rather than enforced federally.

Dive Insight:

It's not yet clear if solar developers will appeal Monday's ruling, but concern remains over what it could mean for the ability of the federal government to enforce PURPA.

"Our core argument ... is that kind of kicking it back to these state commissions, which have shown themselves to be bad actors, is a hollow victory for small producers," Lena Konanova, an attorney who represented Cypress Creek Renewables and qualifying facilities (QFs) in Montana in the case, told Utility Dive before Monday's ruling.

"It really just ensures an endless cycle ... of a state commission doing something unlawful, depriving the small producer of the ability to sell power. Then if all the federal court did was say, ‘Okay, state commission, go try again,' they could just do the same thing over again. ... And we think that would be a terrible result really inconsistent with federal laws."

FERC declined to take action on regulators' 2016 rate freeze for small solar projects, prompting solar developers to file a lawsuit in the federal District Court in Montana. That court ruled that helping the QFs would violate the eleventh amendment, which prohibits the federal government from suing states for past misconduct.

"And we said, 'No, we're not looking for any backward looking relief. We're just looking to sell power prospectively in the future to the utility at the rate that we were entitled to when we formed the legally enforceable obligation [(LEO)],'" said Konanova.

The commission had slashed rates for the solar QFs from $66/MWh to $22/MWh in June 2017. Audio captured Commissioner Bob Lake acknowledging those cuts were likely deep enough to kill small solar projects, and following the video's release, several solar developers in the state filed suit against both the commission and NorthWestern.

In that case, a Montana district court judge ruled in April the PSC had intentionally cut rates to kill small solar projects. The ruling is currently on appeal, but if the appeal is unsuccessful the commission will have to revisit those rates.

Another dispute in the case between the utility and solar developers centered around the interconnection agreement needed in order for them to sell power to the grid. NorthWestern had control over those agreements and in June 2016 stopped processing applications, claiming they were overwhelmed and had the commission put a freeze on payments to the small solar projects.

After FERC ruled against that freeze, the commission revisited those policies, in part preventing NorthWestern from controlling the QFs' ability to enter into contracts. Therefore, the commission argued, the developers' Ninth Circuit case was a moot point, because developers would now have an easier time getting the permits needed to connect.

"If you look at the new rule that the commission has put in place, we took FERC's direction to heart and made a rule that precludes utility control over the QFs ability to incur an LEO," Jeremiah Langston, counsel for the Montana PSC, told Utility Dive.

"So I really think the court's decision reflects that the commission made improvements to its LEO rule, and the appropriate remedy isn't to go back to June 16, 2016, and give the QFs a plainly outdated avoided cost calculation" for what utilities are required to pay solar developers for the power they supply to the grid.

Follow Catherine Morehouse on Twitter

Return to Top

S&P Global Platts
June 6, 2019

PJM analysis shows significant market savings if nukes retire, replaced with gas

By Darren Sweeney, S&P Global Market Intelligence

Wholesale energy market prices would decrease significantly if nuclear plants in Ohio and Pennsylvania are shut down as expected and replaced with natural gas , PJM Interconnection said in a June 5 analysis.

"Modeling the base case, considering retirements and new entry, shows that wholesale energy market net-load payments would decrease by $1.6 billion across the PJM region compared to today's system due to the significant entry of new, efficient resources," PJM wrote in its analysis.

If the deactivations of the majority of the nuclear plants in Pennsylvania and Ohio are withdrawn, however, and the anticipated new generation still enters the market , PJM forecasts an additional $474 million reduction in annual costs over the base case for the entire PJM region. "This reduction in customer payments, however, is not netted against the cost of a potential subsidy to consumers in a particular state," PJM said.

The base case simulates market results for the year 2023. It reflects the permanent shutdowns of the 1,872-MW Beaver Valley nuclear plant in Pennsylvania , and the 908-MW Davis-Besse and 1,268-MW Perry nuclear plants in Ohio , all owned by FirstEnergy Solutions Corp., or FES.

All of PJM 's scenarios forecast the planned retirement of Exelon Corp. subsidiary Exelon Generation's 829-MW Three Mile Island nuclear unit in September.

PJM studied the cost and emissions impacts of the planned retirements at the requests of the Pennsylvania Public Utility Commission and the Office of the Ohio Consumers' Counsel. The requests were made as lawmakers in Ohio and Pennsylvania consider legislation to provide financial support for nuclear plants.

Asim Haque, executive director for strategic policy and external affairs at PJM , presented the findings on Thursday to the Ohio Senate Energy and Public Utilities Committee. The committee is weighing whether to send House Bill 6, which provides credits of $9/MWh to the state's nuclear plants and other clean air resources, to the full Senate.

"Assuming that all remains status quo today with expected new gas units coming online and all FirstEnergy Solutions nuclear units retiring, the wholesale energy market will produce $1.6 billion in annual savings by 2023," Haque said in his testimony.

If the planned retirements of the Davis-Besse and Perry nuclear plants are withdrawn and the gas units still enter the market , PJM forecasts "prices will be driven even lower, saving Ohioans an additional $95 million in the year 2023."

"This decrease, however, does not factor in any subsidy payments that the nuclear units would receive," said Haque, the former chairman of the Public Utilities Commission of Ohio .

No reliability impacts from retirements

A third scenario wherein the Ohio nuclear plants are not retired and only half of the planned gas units enter the market shows "Ohioans would save [$16 million] less than the base case ... in the year 2023," Haque said. This model also does not factor in subsidy payments.

"The PJM report shows the continued operation of the Davis-Besse and Perry plants provides additional savings to the consumers of Ohio than if the units are retired," FES said in a written statement.

The power provider said the analysis also shows Ohio will also benefit from reducing carbon dioxide emissions by 2.3 million tons. The power plants also support more than 4,300 jobs, pay $30 million in state and local taxes and provide 90% of Ohio 's zero-emissions energy, while helping to maintain a diverse energy portfolio, FES said.

The PJM analysis also shows an additional $210 million decrease in load payments for the PJM region if the Beaver Valley units are retained and all anticipated new generation enters the market as expected. These savings break down to $45 million for Pennsylvania and $62 million for Ohio .

PJM said it focused on wholesale energy market impacts rather than impacts on retail electric prices given the limited time to produce its analysis. "However, it is reasonable to assume that retail price impacts would follow in the same direction as wholesale market impacts," PJM wrote in its analysis.

The grid operator has said it sees no reliability impact from the planned closures of the Davis-Besse , Perry and Beaver Valley nukes.

PJM noted that "it can reasonably be expected that imposing additional out-of-market subsidies to retain generation that would otherwise retire would have a chilling effect on new investment in the longer term."

Return to Top

S&P Global
June 6, 2019

Dispatchable New England wind and hydro incorporated into day-ahead market

By Andrew Coffman Smith Market Intelligence

New England's power grid operator is now requiring wind- and intermittent hydro resources with capacity supply obligations to offer into its day-ahead energy market as electronically dispatchable generators.

The ISO New England announced that effective June 1, wind and hydro resources are now required to participate as dispatchable generators in its day-ahead energy market as part of the second phase of its "Do Not Exceed Dispatch Project," or DNE Dispatch Project, aimed at efficiently integrating renewable generation.

The regional transmission organization launched the DNE Dispatch Project in late May 2016 to allow intermittent wind and hydro resources to participate as dispatchable generators in real-time energy markets and begin being electronically dispatched by the ISO-NE.

The electronic dispatch method sets a do-not-exceed limit for a participating intermittent power resource, which is an upper limit on the generation the system can accommodate. In contrast to conventional generators that are typically dispatched at specific output levels, intermittent DNE resources may operate freely between their economic minimum limit and the DNE limit, but not over.

According to the ISO-NE, the first phase of the DNE market changes have already facilitated the ability of renewable resources to set real-time prices, improved price formation, and

increased the use of low-cost renewables on the bulk power system in areas with limited transmission capacity.

"Requiring DNE dispatchable resources to participate in the day-ahead energy market will lead to a more accurate commitment of resources and an improvement in the price convergence between the day-ahead and real-time markets," the ISO-NE explained in an online post. "The change will also help address curtailment issues, which occur when the maximum potential output of a group of resources exceeds capacity, leading to the resources being dispatched down or even offline in order to avoid overloading the transmission system."

The ISO-NE noted that power from the DNE resources that clear in the day-ahead energy market will not be curtailed until all the real-time-only generation is curtailed during a period with transmission constraints. "In essence, obtaining a position in the day-ahead energy market gives the resources a better chance of being dispatched and not curtailed," the grid operator said.

The integration of the intermittent wind and hydro resources into New England's day-ahead energy markets comes a day after one — Entergy Corp.'s 683-MW Pilgrim facility in Plymouth, Mass. — of the region's three remaining nuclear power plants permanently shut down on May 31 after nearly 47 years of commercial operations.

As repeatedly pointed out by ISO-NE President and CEO Gordon van Welie in the lead-up to Pilgrim's retirement, New England is experiencing a worrying trend of nuclear, coal- and oil-fired generation being replaced by a new regional mix of intermittent renewable and "just-in-time" gas-supplied generating resources. Fearful that this systematic loss of conventional generation will jeopardize the reliability of New England's increasingly natural gas-dependent power grid, especially during winter when pipelines can be constrained, the ISO-NE is implementing market changes aimed at ensuring fuel security.

The ISO-NE also is considering creating new markets to allow resources to manage their fuel security over several days. As part of that effort, the RTO is expected to propose a "multi-day" market that puts a price on an expected energy deficiency ahead of winter cold snaps. In a recent interview, an ISO-NE official said the grid operator will ask the Federal Energy Regulatory Commission in October to approve the changes.

Return to Top

EnergyWire
June 7, 2019
RENEWABLE ENERGY

5 things the wind industry is watching

Edward Klump, E&E News reporter

HOUSTON — The U.S. wind sector sees challenges on the horizon — from digesting the planned phaseout of a federal production tax credit to a need for more transmission — even with a record amount of capacity in the development pipeline.

That was the mixed message of optimism and caution as the wind business blew into this energy capital last month.

"Buckle up," said Tom Kiernan, CEO of the American Wind Energy Association, "because in the coming years we are going to do a lot of business, and we're going to do a lot of good for America in creating the clean grid of the future."

Kiernan outlined challenges to utility-scale wind, including cost pressures, volatility from

tariffs, shifting state and local laws, and competition, as well as policy priorities surrounding market design and transmission, carbon emissions, and siting.

The future of the industry, the clean grid, the economy and the planet depends on the success of implementing the group's programs, he said.

Kiernan and others discussed the potential of integrating utility-scale wind with solar and storage in various ways. That idea coursed through the WINDPOWER conference and exhibition, whose theme this year was WIND+.

In April, AWEA announced that the advanced development and construction pipeline for U.S. wind had surpassed 39,000 megawatts. There's hope offshore wind will play a key role in an ongoing wind boom.

Miguel Prado, CEO of EDP Renewables North America, predicted last month in Houston that the industry won't be talking in 10 years about wind or solar or storage.

"We will be talking — all of us — about energy solutions, which are going to be a combination of things depending on the site" and what can "make the product more efficient," Prado said.

Here are five issues on the industry's radar:

From wind to 'clean'

Utility-scale wind advocates see their future tied to a low-carbon portfolio, and AWEA is trying to bolster that connection.

The association said its gathering in Denver next year will include a CLEANPOWER "exhibition hub," which will provide a home for other energy options that have received attention at AWEA's conference.

WINDPOWER will be "the heart of CLEANPOWER, with the addition of exhibition space and conference programming for utility-scale solar, storage, and other clean energy technologies," AWEA said.

Attendance at WINDPOWER topped 7,000 this year, and AWEA's Jana Adams said the CLEANPOWER approach could boost attendance to about 10,000.

"The mindset of the industry is already there, if you will, with the CLEANPOWER concept," Kiernan said.

Speakers last month pondered the potential for co-locating wind, solar and storage. It remains to be seen how wind's role will evolve, as solar and storage are a more common combination. Power markets also can play a role in helping all three work together.

"If you have an energy market, then the grid basically co-locates everything," said Michael Skelly, a senior adviser with Lazard Ltd.

In a statement to E&E News, Abigail Ross Hopper, CEO of the Solar Energy Industries Association, said SEIA noted the importance of collaborating with other industries — including wind — when it rolled out the Solar+ Decade campaign recently.

AWEA already has worked on broader advocacy for utility-scale renewables through efforts such as the RTO Advisory Council. Kiernan stayed focused on the new conference structure and policy priorities when asked about a possible AWEA name change during a briefing with reporters in Houston last month.

"What we're focusing on is the CLEANPOWER, WINDPOWER and this evolution," he said.

A storage ITC?

The federal production tax credit for wind is set to be phased out, which could lead to a decline in new installations. Now the wind industry is looking for what's next — including a possible stand-alone energy storage investment tax credit (ITC) that could benefit the storage element of a potential wind-storage project.

In April, AWEA announced support for the proposed "Energy Storage Tax Incentive and Deployment Act" from Rep. Mike Doyle (D-Pa.). That was followed by AWEA's support for a Senate version of the proposal.

If a federal ITC tied to stand-alone storage remains nonpartisan, there's a good chance it could pass toward the end of the year as part of a tax extenders package, said Alex Morris, vice president of policy and operations at the California Energy Storage Alliance.

"I do think storage is a unique part of clean energy in that it's relatively nonpartisan in many ways," Morris said recently.

In an interview, CEO Kelly Speakes-Backman of the Energy Storage Association also expressed hope that storage legislation will pass this year. The measure could involve a 30% ITC for storage that declines over time along with one for solar.

"I think it's incredibly important that all the resources that are helping to make our grid a cleaner one and a more efficient one and a more resilient one keep an open mind to work together on policies" that further common goals, Speakes-Backman said.

Transmission and siting

Building out the grid and fostering market rules to facilitate clean energy continue to be top priorities for the wind sector.

AWEA, Kiernan said, is seeking market rules at regional transmission organizations (RTOs) to allow utility-scale wind and solar to compete "fairly" for all services they can provide on the grid.

He also described efforts to seek via RTOs and the Federal Energy Regulatory Commission a national interconnected transmission system to allow congestion and curtailment to fall.

Crafting "scientific, evidence-based standards and best practices" around issues such as sound, setbacks and decommissioning is an area of focus when it comes to wind farms, according to Kiernan and AWEA. That might help inform decisionmakers who can come forward with regulations that work for industry as well as local communities.

Maxwell Cohen with IHS Markit Ltd. said the development of renewables may vary by region depending on whether wind or solar is an ideal technology. He didn't see a particularly strong case for co-locating wind and storage, at least at this point. He said there's a stronger case for wind plus transmission.

"That's what we really need is more transmission to get wind to where the demand is and to relieve congestion," Cohen said.

Mike Garland, CEO of Pattern Energy Group Inc., said permitting is getting harder while more transmission is needed to tap into resources and move them to markets. He also spoke about offering customers a range of options.

"What we will have to do as an industry is think multitechnology," he said.

Neha Palmer, who's in energy strategy at Google, said a mix of wind, solar and storage could be beneficial.

"We're very agnostic as to where these resources are located, but we're really excited and energized about the possibility of having the combination that would help us make some of the other financial goals, risk goals ... a little bit better," she said.

Pricing carbon

AWEA is seeking a price on carbon through states and RTOs, as well as federal legislation that would create a "meaningful price on carbon over the long term," Kiernan said.

That effort is getting a boost as talk about carbon and climate is heating up on Capitol Hill.

"As members of Congress push for long-term tax credits, AWEA is encouraging a widely applicable, transferable technology-neutral tax credit based on carbon emissions to better value the contributions of wind and other low-carbon resources," Kiernan said in a statement. "This approach and [complementary] tax policies, including a stand-alone storage ITC, offshore wind ITC, and limited transferability of the existing PTC/ITC, would deliver significant consumer benefits, emissions reductions and new wind farm investment."

Customers are also pushing the utility sector for a cleaner generation portfolio, said Rob Caldwell, president of Duke Energy Renewables.

"I think the trend is going to be a lot more wind ownership and operations by utilities," said Caldwell, who is also AWEA's new board chair.

Steve Lockard, CEO of TPI Composites Inc. and AWEA's outgoing board chair, noted a shift in the nation's capital with Republicans commenting on the reality of climate change. But Lockard said he's not expecting change to happen quickly or easily.

"I think it's great that we're now able in Washington, D.C., to say the words carbon tax out loud and to say the words climate change," Lockard said.

Caldwell said policy discussions in states and regions may be ahead of Washington, adding, "AWEA's approach here is — I would call it not just multitech but multijurisdictional."

Government support

Political and federal muscle could also shape the wind industry's future.

Republican Sens. John Cornyn and Ted Cruz of Texas made their support known at the WINDPOWER event, through recorded videos.

Cruz in one video said Texas' wind power industry has a "vital role" in creating jobs, expanding the state's economy and strengthening U.S. energy security.

The Department of Energy had an in-person presence at the conference, including Dave Solan, deputy assistant secretary for renewable power in the Office of Energy Efficiency and Renewable Energy, and John Sneed, executive director of the loan programs office at DOE. President Trump has proposed slashing DOE's wind research budget, but Congress has rejected those requests the past two years.

Solan spoke about DOE research efforts and said government doesn't have all the solutions. And he said it can be a challenge for generation — not just renewables — in terms of making money right now. Renewables need to be integrated in a reliable manner, he said, noting that they are slated to continue to fall in cost.

"It's very possible that solar could start stranding some thermal assets that have been only built pretty recently in the Southwest," Solan said.

Sneed described conventional, land-based wind farms as a mature industry, meaning developers can readily find debt for projects in commercial markets.

"Our goal is to help drive the next wave of wind technology," he said.

That could involve repowering existing farms with newer technology or being involved with offshore wind, according to DOE.

Nick Wagner, an Iowa utility regulator and president of the National Association of Regulatory Utility Commissioners, told AWEA attendees to think about the unthinkable, even though it may seem like "glory days" for the industry.

"What if climate change produces less wind?" Wagner asked. "What if climate change produces less sun? Those types of things. What if the whole political winds change and we go a totally different direction?"

Twitter: @edward_klump Email: eklump@eenews.net

Return to Top

Gas/LNG/Oil Pipelines

S&P Global Platts
June 6, 2019

Cheniere's plan to add third LNG berth at Sabine Pass lands US Coast Guard support

By Harry Weber

The intracoastal waterway that serves Cheniere Energy's Sabine Pass LNG export terminal in Louisiana is suitable to handle the extra tanker traffic that would be associated with the company adding a third marine berth, the US Coast Guard said in a letter to federal regulators released Thursday.

The filing with the Federal Energy Regulatory Commission follows Monday's positive investment decision from Cheniere to build a sixth liquefaction train at the facility. The additional marine berth is tied to that proposed train. Cheniere has secured $1.5 billion in financing to fund a portion of the construction of the train, the third LNG berth and required supporting infrastructure.

The biggest LNG exporter in the US expects steady growth heading into the next decade, at a time when other developers are starting up export facilities along the US Gulf and Atlantic coasts and proposing new ones. Sabine Pass Train 6 and a proposed mid-scale liquefaction expansion at its Texas terminal are key elements of Cheniere 's plans.

The USCG letter is supportive of adding a third berth at Sabine Pass . The USCG said it evaluated existing traffic along the Sabine-Neches Waterway in consultation with state and local port stakeholders.

"I recommend that the Sabine-Neches Waterway be considered suitable for accommodating the type and frequency of LNG marine traffic associated with this project," Coast Guard Captain J.M Twomey wrote in the letter to FERC . "This recommendation is provided to assist in the commission's determination of whether the proposed facility should be authorized."

FERC has already signed off on a permit certificate for the sixth liquefaction train.

Cheniere is currently operating five trains at Sabine Pass . At its export terminal near Corpus

Christi, it is operating one train, commissioning a second and building a third.

During an investor presentation Monday at which it announced its FID for Sabine Pass Train 6, Cheniere said it it had entered into a long-term gas supply agreement with Apache for its Stage 3 expansion project at its Texas terminal. The proposed project would include up to seven mid-scale liquefaction trains with a total capacity of about 9.5 million mt/year of LNG . An FID on the expansion is expected as early as 2020.

Return to Top

S&P Global Platts
June 6, 2019

Project to export LNG from Delaware River terminal in New Jersey faces headwinds

By Jim Magill

New Fortress Energy wants to bring LNG liquefied from Marcellus Shale gas in Pennsylvania to a proposed storage and export terminal in New Jersey .

But the proposed project is expected to face a number of roadblocks before it is able to ship the LNG to overseas markets from the New Jersey terminal, which would be located on the Delaware River.

New Fortress Energy wants to export LNG from an $800 million liquefaction facility the company is developing in Bradford County, Pennsylvania , Jake Suski, a spokesman for NFE, said in an email Thursday. A public company and a subsidiary of Fortress Investment Group, New Fortress Energy is “a potential customer of the Gibbstown Logistics Center,” the proposed multi-use marine terminal project, Suski said. New Fortress Energy operates a liquefaction facility in Miami that delivers LNG in containers to customers across the Caribbean .

“The facility in Pennsylvania would be able to deliver LNG to customers throughout the Northeast by truck, as well as to customers overseas by ship,” he said.

Fortress Transportation and Infrastructure is an investor in Delaware River Partners, the developer of the Gibbstown Logistics Center project. Delaware River Partners did not respond for a request for comment.

On Thursday, the Delaware River Basin Commission held a hearing on a proposed project to expand the Gibbstown Logistics Center to be able to handle oceangoing vessels. The expansion, which will include the construction of an additional dock/wharf containing two deepwater berths, also will entail dredging the channel.

A large number of people opposed to LNG exports from the river spoke against the proposal, Tracy Carluccio, deputy director of the Delaware Riverkeeper Network, said in an interview Thursday.

Hearing did not focus on LNG

The hearing did not include any information about using the Gibbstown project as a site for exporting LNG , but that would be one of the potential uses of the facility, according to a

public notice from the US Army Corps of Engineers .

“The site will be designed to handle a multitude of products including butane , isobutane , propane , liquefied natural gas (LNG) and ethane , as well as a variety of other liquid products,” according to the Corps document. “The site will be designed to transload various liquid products from truck and railcar to vessels. As a transload facility, products will not be manufactured on site, but rather products will arrive on site in trucks or railcars and be transferred from those trucks and railcars through on-site infrastructure to vessels."

Environmental groups opposed to transporting LNG down the Delaware River in tankers bound for the Caribbean ports alleged that regulators are trying to push through approvals for the Gibbstown Logistics Center project expansion without giving proper notification of its potential as an LNG terminal.

In a June 3 letter to the Delaware River Basin Commission commissioners and executive director, the Delaware Riverkeeper Network said “the proposed facility would involve LNG operations, and yet even the Commission’s public notice and proposed docket fail to identify this crucial fact.”

In an email statement, DRBC spokeswoman Kate Schmidt said the commission’s regulatory authority is limited to the construction and dredging aspects of the project. “We generally do not regulate operations or ship cargos,” she said.

The DRBC commissioners — including the governors of Delaware , New Jersey , Pennsylvania and New York and the division engineer of the US Army Corps of Engineers North Atlantic Division — are expected to take up the issue of the Gibbstown Logistics Center permit at their next regularly scheduled meeting on June 12.

Opponents of the project will urge the governors to deny the permit for the project expansion, Carluccio said.

In another potential reversal for the project, the New Jersey Department of Environmental Protection on Wednesday suspended the Waterfront Development Individual Permit it had issued for the project on May 20, “due to an error in the publication of the receipt of the permit application.”

Return to Top

S&P Global
June 6, 2019

Observers see global LNG market as saturated, difficult for newcomers to enter

By Mark Passwaters Market Intelligence

The ever-increasing amount of U.S. natural gas being shipped to LNG terminals for export is set to flow into a marketplace that is growing more difficult by the day, a pair of industry observers said June 5.

On the subject of the LNG marketplace, speakers at KPMG's Global Energy Conference in Houston had a clear consensus: supply is now significantly outpacing demand and it is becoming increasingly difficult for new suppliers to get into the mix.

Lance Goodwin, the vice president of business development for Freeport LNG Development LP, said his facility is continuing to expand to export gas from the Eagle Ford Shale and

Permian Basin. He also noted, however, that exporters are going to have to be innovative to succeed as the marketplace is increasingly oversupplied.

"There's a supply push now instead of a demand pull, and you have more demanding buyers," he said. "There's four to eight times more supply molecules chasing demand. You have to differentiate yourself in the market."

With final investment decisions being made on facilities like Golden Pass, Cheniere Energy Inc.'s Corpus Christi, Texas, facility coming online and Freeport LNG adding a fourth train, the expectation is that U.S. LNG exports will continue to grow. But more exports are also coming from around the globe, making things more difficult. Newer facilities are finding it increasingly difficult to contract with LNG buyers as competition puts suppliers at a disadvantage.

"It's been a really competitive space, especially in terms of contracting," Wood Mackenzie analyst Kristi Kramer said. Kramer said newer facilities need long-term contracts in order to succeed, something that no longer interests most buyers. One of the demands made by buyers, Goodwin noted, was for shorter contracts so they can take advantage of prices they believe will continue to drop. As result, new suppliers find themselves at a significant disadvantage.

"We are in a market where there is a lot of competition, and the established players and [national oil companies] are really advantaged to move forward with projects," he said.

Finding sources of funding is becoming increasingly difficult for newcomers to the LNG export space, as lenders are viewing it as many buyers are — an area where prices are likely to keep falling and margins will become slim.

"It's very challenging for US producers to do this and stay within the paradigms of conventional finance," Goodwin said. "A lot of companies are looking to find ways to push through financing … that banks aren't too happy with. NOCs, on the other hand, can push it through on balance sheets."

Approximately 20 million tons of the 50 million tons of LNG signed to contracts originates in the U.S. With the domestic market already saturated, observers believe that gas will continue to come to LNG facilities, regardless of how low price gets. Goodwin pointed to the recent agreement between Apache Corp. and Cheniere as a sign of what producers are willing to take to move their product.

"There's a lot of gas to be exported … gas doesn't have a place to go. That deal with Apache and Cheniere is a sign that they're worried about low prices for the foreseeable future," he said.

Return to Top

Greenwire
June 6, 2019
PIPELINES

Firm to reapply for permits to build Northeast gas project

Published: Thursday, June 6, 2019

An Oklahoma company says it will reapply to build a hotly contested pipeline that would carry natural gas from Pennsylvania through New Jersey, and under a bay and the ocean to New York.

Tulsa-based Williams Cos. says it will reapply for key environmental permits that were

rejected last night by New Jersey regulators.

The New Jersey Department of Environmental Protection rejected the permits without prejudice, meaning the company can reapply.

This morning, the company said it would do just that.

"We are currently assessing the discrete technical issues raised by the New Jersey Department of Environmental Protection related to our application for water quality certification," Williams said in a statement. "We believe that we can be responsive to the issues raised by the agency and intend to resubmit the application to the agency in a timely manner to maintain the customer's in-service date requirement."

It marked the second time in a month that the proposal survived a complete rejection by state regulators in the region. Last month, New York regulators determined the Northeast Supply Enhancement Project did not meet their standards, but like this one, their decision was made without prejudice, allowing Williams to reapply (Energywire, May 16).

Williams had planned to spend $926 million on the project, saying that it is needed to ensure adequate heating and energy supplies to New York City and Long Island, and that it can be built safely with minimal environmental disruption.

Environmental groups and other opponents say the project would stir up tons of highly polluted sediment and reverse decades of hard-won environmental improvements in Raritan Bay, which has been struggling with pollution. — Wayne Parry, Associated Press

Return to Top

Njspotlight.com
June 7, 2019

Dep Denies Permits For Natural Gas Pipeline Under Raritan Bay

TOM JOHNSON |

Dredging of contaminated sediments and construction of compressor station near habitat for barred owl cited; company is expected to resubmit application

For the second time in less than a month, regulatory authorities have blocked, at least temporarily, a nearly $1 billion new natural gas pipeline that would cut through portions of New Jersey and under Raritan Bay to supply New York City and Long Island.

In a decision announced late on Wednesday, the New Jersey Department of Environmental Protection denied two crucial permits sought by the Williams Companies for the Transco Northeast Supply Enhancement project, although the application can be resubmitted with remedies for problems cited by the state agency.

In denying waterfront and coastal wetlands permits for the project, the DEP found the application failed to demonstrate a practical alternative to building a compressor station on 16 acres of land in Franklin Township near habitat for barred owl. The state also concluded that dredging of contaminated sediments with mercury, arsenic and PCBs would impair surface water quality in the bay.

The denial of the permits is a significant victory for environmental groups, who deluged Gov. Phil Murphy’s office with calls and petitions opposing the project. It marks one of the few times they have stopped any of the dozen or so new fossil-fuel projects pending in New Jersey.

Cheap natural gas from Pennsylvania

The project is the latest of proposals to expand the region's natural gas infrastructure since the discovery of cheap natural gas in shale fields in Pennsylvania has sparked a boom cycle for the sector. Aimed at bringing needed new gas capacity to Long Island, the project also was denied a permit by New York's Department of Environmental Conservation in May, although it has resubmitted its application there.

The Murphy administration is being pressured to impose a moratorium on new fossil-fuel projects by a coalition of environmental groups, who say any new gas infrastructure conflicts with the governor's call to convert the state to 100 percent clean energy by 2050.

"If we are serious about confronting climate change, these fossil fuel projects simply cannot be built,'' said Junior Romero, organizer for Food & Water Watch, one of the groups calling for a moratorium. "The Murphy administration was right to reject Transco's reckless bid to sacrifice the remarkable recovery of Raritan Bay for the sake of its own profits.''

Up until now, the state has been moving fossil-fuel projects forward, approving four water quality permits for aspects of pipeline projects, including one for a proposed new natural gas-fired plant in the Meadowlands. It also has essentially ended another pipeline project in the Pinelands that would have delivered fuel to an old coal facility in Cape May, a proposal abandoned by the current owner of the plant.

Meanwhile, the DEP also has suspended permits it had given to a proposed liquefied natural gas terminal in Gibbstown in South Jersey because of an error in the public notice about the project. The agency has opened a new 15-day period for the public to comment on the project, which calls for super-cooled natural gas from Pennsylvania to be shipped to the facility via trucks.

'The fight isn't over yet'

Williams did not return calls for comment. In a statement to the Associated Press, the company said it would reapply for the permits.

"The fight isn't over yet. DEP denied the permits without prejudice, which means Transco can come right back and re-apply,'' said Jeff Tittel, director of the New Jersey Sierra Club, who also called for a moratorium by the governor. "That would help prevent NESE from coming back.''

For the most part, however, the DEP decision was hailed by climate activists and clean-energy advocates.

"New Jersey used its authority to protect our water, natural resources, and communities from a dangerous pipeline. Strong laws mean nothing if they aren't backed up by strong enforcement. In deciding this issue on its own merits, New Jersey stepped up for the public interest,'' said Patty Cronheim, outreach coordinator for ReThink Energy NJ, a group advocating a transition to cleaner fuels.

The project won approval from the Federal Energy Regulatory Commission in early May. Besides the two permits denied by DEP Wednesday, the company also requires a permit under the federal Clean Water Act from the agency, which is expected to be decided by the end of June.

Return to Top

The Energy Daily
June 7, 2019

New Jersey denies water permits for natural gas pipe to New York

Officials under Democratic Gov. Phil Murphy Wednesday made New Jersey the third state in the country to block a major natural gas infrastructure project when they denied key wetlands and water permits for Williams' Northeast Supply Enhancement project, which is to bring inexpensive Marcellus shale gas from Pennsylvania to gas customers in New York City and on Long Island.

The state Department of Environmental Protection denied Clean Water Act and other related permits based on impacts of a proposed compressor station to about 3 acres of wetlands. The agency also said dredging in the Raritan Bay for the underwater section of the pipeline would stir up toxic chemicals in bottom sediment, and that Williams had not demonstrated a compelling public need for the gas project.

New Jersey's action follows a similar denial of a Section 401 permit for the project last month by officials under New York Gov. Andrew Cuomo (D), who has attempted to block numerous gas infrastructure projects in the state in support of his efforts to cut greenhouse gas emissions and bolster renewable energy.

Green groups have been urging governors of other states to follow Cuomo's lead, and Murphy's action against the Northeast Supply Enhancement (NESE) project follows a recent decision by officials under Oregon Gov. Kate Brown (D) denying state water permits for the Jordan Cove gas export project.

The capacity of the $927 million NESE line is fully subscribed by National Grid gas utilities in southern New York, which say the project is needed to ease pipeline constraints in the region. National Grid and Consolidated Edison, the other major gas distributor in the New York City area, have cited the constraints in imposing moratoriums on new gas hook-ups in and around the city.

Williams has submitted revised applications for the permits in New York and indicated it will do the same in New Jersey.

Return to Top

S&P Global
June 6, 2019

New Jersey rejects permits for Transco pipeline expansion offshore New York City

By Edwin Vladimir Mengullo Market Intelligence

New Jersey regulators rejected Transcontinental Gas Pipe Line Co. LLC's application for key permits required to build the Northeast Supply Enhancement pipeline project, designed to bring an additional 400 MMcf/d of natural gas supply to markets near New York City, The Associated Press reported June 5.

In a decision released late June 5, the New Jersey Department of Environmental Protection denied the Williams Cos. Inc. subsidiary's permit applications. The permits included authorizations for waterfront development and wetlands work, the report said. The agency's decisions are without prejudice, giving Transco an opportunity to reapply.

In addition to citing wetlands and water impacts from the project, the New Jersey agency ruled that Transco had not adequately compared its project to other energy options for the area to show that the pipeline expansion was the best solution, the AP said. "Alternatives that further avoid or minimize impacts to freshwater wetlands and riparian areas may be available and require further analysis," the agency said in a statement.

In a June 6 statement, a Williams spokesperson said the company is looking into the issues raised by the agency. "We believe that we can be responsive to the issues raised by the agency and intend to resubmit the application to the agency in a timely manner to maintain the customer's in-service date requirement," the spokesperson said.

The department's decision came three weeks after New York regulators denied the project a water quality permit. Like New Jersey, New York regulators allowed Transco to reapply. New York has opposed several pipeline projects in the last few years.

The Northeast Supply Enhancement project was designed to serve National Grid USA utilities in the New York City area. The project consists of almost 24 miles of 26-inch-diameter pipeline that would run underwater from New Jersey through New York's Richmond and Queens counties to connect to Transco's Rockaway delivery lateral in Queens, N.Y., as well as other sections of pipeline and a compressor station in New Jersey.

The project secured Natural Gas Act certificate approval from the Federal Energy Regulatory Commission on May 3, subject to conditions identified in the commission's final environmental impact statement for the project.

Return to Top

Natural Gas Intelligence
June 6, 2019

Transco Expansion Faces Another Roadblock as New Jersey Denies Permits

Jamison Cocklin

New Jersey regulators have denied several key permits for Transcontinental Gas Pipe Line Co. LLC's (Transco) Northeast Supply Enhancement Project, further imperiling the pipeline expansion after New York similarly denied approvals for it last month.

In a late decision on Wednesday, the New Jersey Department of Environmental Protection (NJDEP) denied a water quality certification (WQC) for the project along with coastal wetland, flood hazard area and waterfront development permits. The agency found that the company failed to demonstrate compliance for those authorizations for a variety of reasons. However, The agency did deny the permits "without prejudice," leaving the door open for Transco to reapply for them.

The company said in a statement that it is "assessing the discrete technical issues" raised by the agency. "We believe that we can be responsive to the issues raised by the agency and intend to resubmit the application to the agency in a timely manner to maintain the customer's in-service date requirement."

Northeast Supply is fully subscribed by utility National Grid to get more gas into New York City by the winter of 2020-21. Supply shortages in the city are impacting new gas service.

NJDEP said alternatives that could minimize the project's environmental impacts require further analysis. The agency also said that Transco failed to show public need for a compressor station in Franklin Township and expressed concerns about dredging in Raritan

Bay and its impacts on water quality.

The New York State Department of Environmental Conservation (DEC) expressed similar concerns in denying the project's WQC last month, saying Northeast Supply would fail to meet state standards.

Specifically, New York regulators said the project, part of which would cross the Raritan and New York bays underwater, would result in "significant water quality impacts" from the re-suspension of sediments and other contaminants, including mercury and copper. The pipeline would also "cause impacts to habitats" because of disturbances to shellfish beds and other resources, DEC said.

The Federal Energy Regulatory Commission issued a favorable final environmental impact statementearlier this year, clearing the project to advance, and it approved Northeast Supply in May. New York also left the door open for Transco to resubmit its WQC application, which the company has done, but the move sets the project up for further regulatory review that could take up to a year in that state.

As New York continues to favor stronger climate goals it has declined to authorize a series of natural gas pipeline projects over the last three years. Similarly, New Jersey has started to show a stronger hand with the industry.

Since Democratic Gov. Phil Murphy took office last year, the state has rejoined the Regional Greenhouse Gas Initiative, explored more renewable energy and pursued stronger efforts to combat climate change. Murphy also has voiced his support for a ban against hydraulic fracturing in the Delaware River Basin, and the state has battled the PennEast Pipeline project.

Environmental groups have waged a staunch campaign in opposition to Northeast Supply in both states. The National Resources Defense Council and the New Jersey Sierra Club were among those that quickly hailed the NJDEP's decision.

"This is a big victory for the people and the environment," said New Jersey Sierra Club Director Jeff Tittel. "NJDEP stood up to Transco and stood with us by rejecting the Northeast Supply permits. This pipeline is a dangerous, damaging and unnecessary project that would pollute our waterways and jeopardize public safety. "

Of particular concern for the project's opponents is the 23-mile segment of pipeline that would cross Raritan Bay from Old Bridge, NJ, to Rockaway Point in Queens. There are already other pipelines installed and operating in those waters. Transco installed the first line in the Raritan Bay in 1951.

Northeast Supply is designed to create 400 MMcf/d of incremental firm capacity to meet demand for gas in New York City. The expansion would include 10 miles of pipe in Pennsylvania, three miles in New Jersey and 23 miles of pipe that would stretch into offshore New Jersey and New York in addition to the compressor station in New Jersey and more horsepower at an existing station in Pennsylvania.

The system would link gas from Transco's Compressor Station 195 in York County, PA, to its offshore Rockaway Transfer Point, an existing interconnection between the underwater Lower New York Bay Lateral and the Rockaway Delivery Lateral in New York waters. Pennsylvania issued a WQC for the project in March 2018.

Return to Top

Newsday.com
June 6, 2019

NJ deals another setback to new gas pipeline to LI, NYC

By Mark Harrington

mark.harrington@newsday.com @MHarringtonNews

In its second major setback in a month, National Grid and Williams Co.'s plan for a substantial new gas pipeline to Long Island and New York City was denied two key permits by New Jersey regulators Wednesday.

The state's denial, which allows the developer to update and resubmit its applications, could further delay and potentially kill a major new pipeline to the region, people on both sides of the issue say.

National Grid, claiming it faces a looming gas shortage, has already stopped processing new applications for firm (meaning uninterrupted year-round service) natural gas hookups on Long Island, Brooklyn and Queens, pending a final review by New York. The state rejected a water quality permit for the pipeline last month. The New Jersey denial keeps that no-processing status in place, the company said.

In a statement announcing the rejection, New Jersey's Department of Environmental Protection found that Williams' proposed dredging for the pipeline "could adversely impact surface water quality within New Jersey waters of the Raritan Bay." The department said Williams must show steps it would take to minimize disruption to the bay and ensure compliance with water-quality standards.

Williams, in a statement, said it planned to quickly refile its application.

"We are currently assessing the discrete technical issues raised" by New Jersey regulators, Williams spokesman Christopher Stockton said in a statement. "We believe that we can be responsive to the issues raised by the agency and intend to resubmit the application to the agency in a timely manner to maintain the customer's in-service date requirement."

The pipeline would bring an additional 400 million cubic feet of gas per day to Long Island and the metropolitan region, addressing what National Grid said was a critical shortage of supply. The Federal Energy Regulatory Commission approved the pipeline May 3. The 24-mile gas project would encompass about 18 miles of pipeline under New York Bay and connect with existing infrastructure at sea, beyond the Rockaways.

New York State's Department of Environmental Conservation expressed similar environmental concerns in rejecting Williams' water quality permit last month, but also allowed the company to resubmit its application with updates. The company has already done so.

In its rejection letter last month, New York's DEC noted the project, called the Northeast Supply Enhancement project, or NESE, "would result in significant water-quality impacts from the re-suspension of sediments and other contaminants, including mercury and copper." DEC said it would also "cause impacts to habitats due to the disturbance of shellfish beds and other benthic resources."

Stockton said, "We strongly believe the discrete technical issues raised" by the New York DEC "were addressed in our previous application and, in this application we have provided additional information showing that these issues have been addressed."

National Grid, in a statement following New Jersey's rejection, said it remained "cautiously optimistic that the project will proceed on schedule and be in service for Brooklyn, Queens and Long Island customers by the winter" of 2020-2021.

Long Island business groups expressed concern the denial would harm the region's economic viability.

Kyle Strober, executive director of the Association for a Better Long Island, a developer group that backs the pipeline, said New Jersey's decision "will choke Long Island's future economic viability."

"Our region is on the cusp of an economic development revolution," Strober said. "It's unfathomable that Long Island families will no longer be able to convert their home from oil to gas."

Added Kevin Law, president of the Long Island Association: "New Jersey's action is unfortunate and thus we encourage both states to work together to get their concerns addressed by the applicant and simultaneously approve this project in the very near future to avoid negative economic impacts to our region."

Opponents, chiefly in the environmental community, which argues that there is no actual gas shortage, declared another tentative victory Thursday, but noted the fight wasn't over.

"This victory affirms that dangerous gas pipelines have no place in our communities," said Kimberly Ong, senior attorney for environmental watchdog group, the Natural Resources Defense Council. "Instead of locking in a fossil-fueled future that threatens our waters and endangers marine life, New Jersey is rightly driving forward a local clean energy economy. Rest assured — we will use every tool in the kit to stop this reckless project from ever being built."

Return to Top

Nj.com
June 6, 2019

N.J. just blocked a controversial pipeline in Raritan Bay

By Michael Sol Warren | NJ Advance Media for NJ.com

Gov. Phil Murphy's administration effectively blocked the progress of a controversial proposed natural gas pipeline late on Wednesday night, by denying key permits needed for the project.

The pipeline would've stretched more than 23 miles across Raritan Bay and New York Bay, connecting Middlesex County to an existing pipeline in the water off Breezy Point in Queens.

The interstate pipeline is a key part of the Northeast Supply Enhancement project (NESE), a nearly $1 billion effort by the Oklahoma-based energy company Williams to expand its natural gas infrastructure throughout New Jersey, New York and Pennsylvania.

Besides the high-profile offshore pipeline, the NESE project also calls for more than six miles of new natural gas pipeline in Middlesex County and a new 32,000 horsepower compressor station in Somerset County.

In its denial letter, the NJDEP explained that the dredging needed for the Raritan Bay pipeline could harm water quality by stirring up toxic contaminants like PCBs, mercury and arsenic.

Williams operates the 10,000 mile long Transco pipeline, which brings natural gas from as far away as the Texas Gulf Coast to the Northeast. The NESE project was proposed by the company to serve higher demand for natural gas in New York City and Long Island.

But environmental groups have staunchly opposed the NESE project, arguing that the expansion of Transco capacity was not necessary and would do little more than grow fossil fuel use in a region where leaders like Murphy and New York Gov. Andrew Cuomo have pledged to transition to clean energy to fight climate change.

“There is no benefit to the people of New Jersey other than more water pollution putting us at risk," said Jeff Tittel, the director of the New Jersey Sierra Club. "DEP did the right thing in denying these permits. This decision is a huge win for the all the people, especially those who fought the project.”

The proposal hit a major obstacle in May when Cuomo’s administration decided against permitting the project for his side of the water. But New York’s rejection was made without prejudice, and Williams has since reapplied for approval in the state.

That could happen in New Jersey, as well. Tittel said that the NJDEP denied the permits without prejudice, just as New York did, leaving the door open for Williams to apply again.

“We are currently assessing the discrete technical issues raised by the [NJDEP] related to our application for water quality certification," Williams said in a statement. "We believe that we can be responsive to the issues raised by the agency and intend to resubmit the application to the agency in a timely manner to maintain the customer’s in-service date requirement.”

Williams does have a green light from the federal government on the project, having received approval from the Federal Energy Regulatory Commission in May.

Return to Top

Associated Press
June 6, 2019

Opponents of NEXUS pipeline argue land was improperly seized

A three-judge panel is expected to rule on the case in the next several months.

Author: Mark Gillispie, Associated Press

GREEN, Ohio (AP) — Landowners in Ohio hope to convince a federal appeals court that they were forced by a federal agency to sell their property to a pipeline builder sending large quantities of natural gas to Canada.

At issue is the Federal Energy Regulatory Commission's approval of a project that allowed for the use of eminent domain to build of the 256-mile-long (412-kilometer-long) NEXUS Gas Transmission pipeline across northern Ohio and into Michigan that went into service in October.

A three-judge panel from the U.S. Court of Appeals for the District of Columbia heard oral arguments May 6 on a petition filed by the city of Oberlin, Ohio — one of the communities the pipeline crosses — and a group called Coalition to Reroute Nexus. The petition seeks to have the regulatory commission reconsider the certificate it granted to build the pipeline.

The panel is expected to rule in the next several months.

The opponents' main argument is that the commission approved an interstate pipeline, which allows for the taking of property through eminent domain, when it should have considered it an export pipeline for which eminent domain is not permitted. Eminent domain allows a government to seize private property, with compensation, for a public use.

Nearly a third of the pipeline's daily capacity of 1.5 billion cubic feet (40 million cubic meters) of gas is headed to Canada, attorney Carolyn Elefant told the panel.

"This case implicates constitutional rights," Elefant said.

Carol Banta, an attorney for the regulatory commission, argued that most of the gas being shipped through the pipeline will be consumed in the U.S. She said some of the gas being sent to southern Ontario's Dawn Hub could be sold back to the U.S.

The pipeline is a partnership between Calgary, Canada's Enbridge Inc. and Detroit's DTE Energy.

Banta told the panel that 93% percent of the pipeline was built without using eminent domain, a figure she called "unusually large."

Judge Robert Wilkins responded: "Even if it's 1% of eminent domain needed, that's someone's property being taken, and that raises constitutional issues."

NEXUS took dozens of property owners to federal court to build the pipeline. The last settlement was reached last week with Elaine Selzer, a resident of Green, Ohio, which the pipeline also passes through. Selzer, a petitioner in the appeals court case, said she is not allowed to divulge the amount she and her family were paid for roughly 2 acres (8,000 square meters). She has told The Associated Press that months ago she rejected NEXUS' initial offer of $100,000.

Selzer said she's still unhappy but was advised to take the money because the case could drag on for years.

"I'll never be satisfied with what they did to me," Selzer said. "I'd have liked to have taken it all the way to the Supreme Court if I could."

Adam Parker, a NEXUS spokesman, said in a statement that the Enbridge-DTE partnership worked with property owners for four years.

"Great effort has been taken to address individual landowner concerns and minimize disruption during the construction process," Parker said.

David Mucklow, another attorney for the opponents, hopes the court will order the pipeline shut down if it rules in their favor. Elefant said that is not likely.

"Our best-case scenario is that this gets sent back to FERC to explain itself," she said.

The pipeline required just .2 acres (800 square meters) of city owned property in Oberlin, the home of a highly regarded liberal arts college. The city finally settled after a protracted eminent domain fight. A portion of the pipeline in a neighboring township sits just 50 feet (15 meters) from the backyards of Oberlin residents and well within the blast zone should it ever explode, city Law Director Jonathan Clark said.

The coalition that joined in the filing first tried to get NEXUS to move the pipeline away from populated areas like Oberlin and Green, which is outside Akron. When that was unsuccessful, the coalition tried to stop FERC from approving the project altogether.

"I want the companies to use common sense about where they build these things," said Paul Gierosky, who helped found the coalition and who lives in Medina County, which the pipeline also passes through. "They get to use eminent domain and FERC approves every application they get. What kind of process is that?"

Return to Top

EnergyWire
June 7, 2019
LOBBYING

Gas companies hire ex-Hill aides

Timothy Cama, E&E News reporter

Two companies in the natural gas business retained Democratic lobbyists at a major Washington, D.C., firm last month to advocate for them.

Liquefied natural gas exporter Cheniere Energy Inc. and Mountain Valley pipeline are both now clients of Cassidy & Associates, the firm revealed this week in disclosures sent to Congress.

Amelia Jenkins, a former top aide to House Natural Resources Chairman Raúl Grijalva (D-Ariz.), is lobbying for both companies, while Kai Anderson, the firm's CEO and former deputy chief of staff to former Sen. Harry Reid (D-Nev.), joins her on the Mountain Valley contract.

The lobbying agreements, which were among nearly a dozen new client disclosures Cassidy filed this week, came as businesses continue to figure out how to deal with the new Democratic majority in the House, led by Speaker Nancy Pelosi of California.

Many of the party's most outspoken lawmakers are hostile to fossil fuels, but some still see room for them in a low-carbon world.

Cassidy is representing Mountain Valley through a subcontract with law firm Holland & Hart LLP.

"Cassidy is a well-respected firm and as a new client, the filing of proper documentation is simply in the normal course of business," Natalie Cox, spokeswoman for Equitrans Midstream Corp., said in a statement. Equitrans is one of the five companies in the joint venture that owns Mountain Valley, and it expects to operate the line that is planned to run through West Virginia and Virginia.

Cassidy did not respond to requests for comment, and Cheniere declined to comment.

Cheniere built and operates two of the four LNG exporting terminals in the contiguous United States: the Sabine Pass facility in Louisiana and the Corpus Christi facility in Texas. It is working to expand the plants' capabilities.

Cassidy wrote in its Cheniere disclosure only that it will be lobbying on "Worker Safety and Environmental Protection."

Mountain Valley, meanwhile, started construction last year and work is continuing, with a goal of finishing by the end of this year.

It has run into a number of issues while building the line, including two key permits that are currently suspended, which it needs to cross federal Forest Service land and wetlands. The company agreed in April to pay $266,000 to settle several environmental violation accusations in West Virginia.

Cassidy said its Mountain Valley lobbying would be on "Natural Gas Pipelines."

Among Cassidy's other new clients is LTC Action, the advocacy arm of the Linden Trust for Conservation, a climate policy foundation funded by former Goldman Sachs partner Larry Linden.

Cassidy also only has Democratic lobbyists working on the LTC account. It said that "Carbon Dioxide Removal" would be the focus of its advocacy — a field that is in its infancy but has gotten more attention lately amid growing discussions that it might be necessary to fight climate change.

Reporter Kevin Bogardus contributed.

Twitter: @Timothy_Cama Email: tcama@eenews.net

Return to Top

Congress

E&E NewsPM
June 6, 2019
ENERGY POLICY

Lawmakers introduce bills to bolster storage, modernize grid

Jeremy Dillon, E&E News reporter
Democratic senators introduced a series of bills yesterday meant to bolster energy storage and better prepare the grid for an influx of renewable power.

Led by Sen. Ron Wyden (D-Ore.), the bills are the latest effort to increase Department of Energy research funding for storage and other renewables seen as critical in the fight against climate change.

"Climate change is not some distant threat in the future. It's real, it's here and we cannot afford inaction," Wyden said in a statement.

"To mitigate its impacts, we need to be all in when it comes to clean, renewable energy," he said. "That means making the investments needed to spur innovation to make renewables more available and affordable, while also improving the resiliency of the grid."

Among the bills that reemerged yesterday, S. 1741 would infuse about $3.3 billion into DOE energy storage research over the next decade.

The bill, co-sponsored with fellow Senate Democrats Sheldon Whitehouse and Jack Reed of Rhode Island and Chris Coons of Delaware, would also direct DOE to set target goals in development efforts to reduce the cost of deploying energy storage.

Maine Republican Sen. Susan Collins is backing similar legislation, S. 1602, albeit with less money attached.

Witnesses told the Senate Energy and Natural Resources Committee this week that the federal government still has an important role to play to ensure the continued development of grid-scale energy storage (E&E Daily, June 5).

Sen. Maria Cantwell (D-Wash.) also introduced legislation, S. 1751, yesterday that would look to open up more opportunities for additional pumped storage hydropower development by authorizing the use of multiple Bureau of Reclamation reservoirs.

Pumped hydro makes up the vast majority of energy storage technology currently deployed on the grid, with some 25 gigawatts deployed across the United States.

Other energy bills

Wyden also introduced other bills yesterday meant to help the development of a more flexible and resilient grid.

One, S. 1742, would direct DOE to create "competitive, cost-share grant programs for new small-scale, grid-connected projects."

The second bill, S. 1740, would push DOE to find strategies to increase grid flexibility against disruptions caused by natural disasters.

Separately, House lawmakers this week introduced:

H.R. 3100, from Rep. Dan Lipinski (D-Ill.), to direct DOE to establish prize competitions relating to climate and energy.

H.R. 3120, from Rep. Matt Cartwright (D-Pa.), to establish an energy efficiency materials pilot program.

Twitter: @JeremyDillonDC Email: jdillon@eenews.net

Return to Top

E&E NewsPM
June 6, 2019
CLIMATE

Every Senate Dem signs on to Paris bill — except Manchin

Nick Sobczyk, E&E News reporter

Every member of the Senate Democratic caucus is supporting a bill to keep the U.S. in the Paris climate agreement — except Energy and Natural Resources ranking member Joe Manchin.

The West Virginia Democrat was the only member of his caucus not to immediately sign on as a co-sponsor on S. 1743, the "International Climate Accountability Act," which would prohibit the Trump administration from using funds to withdraw from the Paris climate accord and require it to come up with a plan to meet emissions targets.

Democrats, led by Sen. Jeanne Shaheen of New Hampshire, formally introduced the bill yesterday as a companion to H.R. 9, the first major climate bill to pass the House in a decade.

Like its House counterpart, the Senate bill is purely messaging and has virtually no chance of becoming law as stand-alone legislation. It would force President Trump to renege on his own policy after he announced two years ago that the U.S. would withdraw from the agreement in November 2020, the earliest possible date.

Senate Majority Leader Mitch McConnell (R-Ky.) has already pledged to block the measure, which passed the House with the support of every Democrat — and three Republicans — last month (Greenwire, May 2).

But Senate Democrats are hoping it helps rally support for the Paris Agreement within their caucus and frames McConnell as the biggest barrier to climate action.

"When America speaks, the world listens," Senate Environment and Public Works Committee ranking member Tom Carper (D-Del.) said in a statement. "We cannot allow an administration controlled by climate science deniers to speak for the American people, the vast majority of whom want our country to act boldly to address climate change."

Right on cue, a variety of green groups and Democratic Party supporters began sending out

statements of support for the bill this afternoon.

Both the Natural Resources Defense Council and League of Conservation Voters drew a direct comparison between the bill's 46 Democratic sponsors and McConnell's move to block climate-related legislation.

"Those who oppose this crucial climate action — including Sen. McConnell and his big polluter backers — are condemning our kids, communities and country to runaway climate costs and danger we know we can avoid," NRDC President Rhea Suh said in a statement.

Manchin's absence is notable, if not surprising. The coal-state senator has softened his tone on energy and climate issues since taking the top Democratic spot on the Energy and Natural Resources Committee, but he supported Trump's decision to pull out of Paris.

In a 2017 statement after the president announced the withdrawal, Manchin said he does not believe the Paris Agreement "ensures a balance between our environment and the economy."

Manchin made a similar point in a statement to E&E News this afternoon, saying that he has "never believed the Paris Agreement created a level playing field amongst nations — particularly when it comes to unifying all major emitters around the same goals."

"I believe that climate change is an urgent threat that we must address, and I have witnessed the rapid changes occurring in the Arctic and here at home due to its impacts," Manchin said. "That is why I am focused on developing bipartisan proposals that allow for US leadership on climate science and technology."

Twitter: @nick_sobczyk Email: nsobczyk@eenews.net

Return to Top

Other Agencies

The Energy Daily
June 7, 2019

PHMSA sidesteps key safety rules in proposed reauthorization bill

BY JIM DAY

Proposed legislation released Monday by the Transportation Department to reauthorize pipeline safety programs makes no mention of key safety rules that were previously mandated by Congress but have not been adopted—including requirements for automatic shutoff valves and the authority to issue emergency orders to address imminent risks—and fails to address a host of provisions that safety watchdogs have been urging for years.

The absence of those safety measures means the Trump administration's proposed legislation to reauthorize the Pipeline and Hazardous Materials Safety Administration (PHMSA) for fiscal years 2020 to 2023 is likely to receive a decidedly lukewarm reception in the Democratic-controlled House.

Notably, House Energy and Commerce Chairman Frank Pallone (D-N.J.) last month called PHMSA "notorious for its inability to meet congressionally-mandated deadlines and carry out its mission in an efficient and effective way." He and other PHMSA critics note the agency still has not acted on safety rules ordered by Congress in 2011.

The proposed legislation released by Transportation Secretary Elaine Chao and PHMSA

Administrator Skip Elliott this week also does little to address specific concerns raised by Pallone that he says compromise the agency's safety agenda. In particular, Pallone wants to remove language from current laws that he says requires PHMSA to conduct detailed and unrealistic cost-benefit analyses of any rule changes, thereby undermining the agency's ability to make any changes. He also wants to make statutory changes to allow the public to sue PHMSA to force it to meet its statutory mandates.

Beyond those issues, PHMSA's proposed legislation does not address long-standing recommendations from the federally-funded Pipeline Safety Trust to raise civil and criminal penalties for safety violations; strengthen requirements for pipelines to report failures; and to bring more than 400,000 miles of oil and gas gathering lines under PHMSA's oversight authority.

Instead, the PHMSA proposal focuses mostly on non-controversial provisions such as creation of a voluntary safety information-sharing program; improved data collection on pipeline construction projects; and clarifications regarding how PHMSA works with the Federal Energy Regulatory Commission to permit liquefied natural gas export projects, a top energy priority for the Trump administration.

PHMSA's legislation tracks closely with requests from the pipeline industry, which has used the restrictive cost-benefit requirements in current law to hinder PHMSA's development of new rules and block expansion of PHMSA's oversight authority.

The most robust safety provision of the PHMSA legislation would require gas distribution companies to install overpressure protections on low-pressure systems to prevent incidents such as the September 2018 disaster in the Merrimack Valley in Massachusetts. An error on a pipe replacement project allowed high-pressure gas to pour into the distribution system, where it caused explosions and fires that killed one person and destroyed or damaged more than 100 buildings.

Those measures, which would give gas companies one year to install devices to cut off flow into low-pressure distribution systems or relieve overpressure by venting, drew modest praise from some congressional Democrats, including Massachusetts Sen. Ed Markey, who called them "commonsense provisions that would help avoid disasters." However, he said much more extensive pipeline safety regulations were needed.

Congress expects to take up the PHMSA reauthorization legislation later this year, but it may hit rougher water than when the 2016 reauthorization sailed through the House and Senate with significant bipartisan support, largely because it avoided controversial issues in the expectation that PHMSA would finalize safety rules stemming from 2011 congressional mandates.

That has not happened, though, as PHMSA still has not finalized sweeping rules meant to strengthen gas pipeline safety, including the proposals to require automatic shutoff valves, revise rules covering maximum operating pressures, expand requirements for integrity management systems and bring gathering lines under federal oversight.

Besides avoiding those issues, the administration's proposed PHMSA authorization also contains provisions that would make it a criminal offense for protesters to impede construction of new pipelines—a measure certain to hit resistance from Democrats who have allied themselves with pipeline opponents over the projects' potential climate impacts.

On Monday, PHMSA said the proposed legislation would improve pipeline safety by encouraging replacement of aging gas distribution systems, strengthening incident reporting requirements and supporting research and development of new technologies that can enhance

pipeline safety.

It also would allow for more timely incorporation into PHMSA regulations of updates of voluntary industry safety codes, which the industry has regularly supported as a way of maintaining flexibility in the safety requirements.

“This proposal renews our commitment to pipeline safety by encouraging innovation and greater stakeholder collaboration, as well as by clarifying certain pipeline replacement practices for local distribution systems to help prevent future incidents,” Elliott said.

In its 2011 reauthorization of PHMSA, Congress mandated numerous safety improvements in response to the 2010 gas pipeline explosion that killed eight people in San Bruno, Calif. The 2011 law also directed PHMSA to require operators to install leak detection systems on liquids pipelines, but that rule also has not been finalized.

Elliott told lawmakers last month that finalizing rules mandated in the 2011 and 2016 reauthorization “remains a top priority,” and that the agency expects to finalize parts of the gas transmission and liquid pipeline rules later this year.

PHMSA has split off some of the more controversial parts of the rules, however, to make them more manageable. Elliott did not give a firm date for finalizing parts of the rules, which have been vehemently opposed by the industry over what it says will be huge costs.

Return to Top

Greenwire
June 6, 2019
CLEAN WATER ACT

WOTUS review stumps advisers: 'The science isn't right'

Ariel Wittenberg, E&E News reporter

Members of EPA's Science Advisory Board grappled with whether and how to weigh in on the Trump administration's rollback of clean water standards given the administration's insistence that the proposal is a question of policy, not science.

"They have the right to change the policy, but the science isn't right," member Robert Merritt said.

The "Waters of the U.S." proposal from EPA and the Army Corps of Engineers would erase Clean Water Act protections for wetlands without surface water connections to larger waterways and streams that only flow following rainfall. At least some federal protections for those waters have been in place since the Reagan administration.

The Science Advisory Board last addressed questions of Clean Water Act jurisdiction in 2014, reviewing and supporting a 300-page "connectivity report" describing how wetlands and small waterways can affect larger resources. The Obama administration used that report, and the board's review, as the basis for its Clean Water Rule, but the Trump administration has insisted that its rollback does not need to be based in science.

"I'll note that the proposed revised definition is a legal and policy decision that is informed by the statute, legislative history, Supreme Court interpretations and the EPA and Department of Army's respect for the traditional power of the states to regulate their inland water resources," EPA Director of Wetlands, Oceans and Watersheds John Goodin told the board today. "The line between federal and state waters is informed by, though not dictated by, science."

That left EPA's science advisers questioning how to handle the situation, particularly because the group still stands by its 2014 scientific review.

"That's what makes this tricky, because while the science hasn't changed, it doesn't seem to be entirely relevant to the way EPA is reviewing this," Deborah Hall Bennett, an SAB member and a professor in environmental health at the University of California, Davis, said of the WOTUS proposal.

A working group tasked with reviewing WOTUS acknowledged EPA's position but still determined: "In reviewing the proposed rule we find that there are some gaps between science and policy that warrant review and bridging."

Those gaps include the significant water quality and filtering benefits that wetlands and streams that flow only after rainfall can have on larger downstream waterways.

However, members of the larger board seemed unsure of what they could do, given EPA's position.

"If we consider the four questions the work group raised, then what would be the impact?" asked SAB member Sue Marty of DowDuPont Inc. "Wouldn't the policy proposal move forward because it is a policy decision?"

University of Washington environmental scientist Alison Cullen, who chaired the work group, said she wasn't sure whether the advisory board could influence an EPA policy decision but noted that the "gaps" in the WOTUS proposal are things the agencies had asked for public comment on.

"Certainly the Science Advisory Board should at least have a footing with the public comments being considered, if not hopefully a little more cachet," she said. But, she added, "I don't think we pick and choose the issues we weigh in on based on if they are going to use our science. We provide the science; we don't say, 'This is how you should use it.'"

Given that the science hadn't changed, however, SAB member Anne Smith said she wasn't sure what the board could say if it did weigh in.

"I'm perplexed by the situation we put ourselves in, because the board did a review in [2014], and I haven't heard anybody say that anything has changed," she said, suggesting that the board resubmit its approval of the connectivity report. "The difference between then and now is not about scientific information; it's about policy."

Ultimately, the board voted to write a "commentary" to EPA explaining the science at issue in the WOTUS rule, a solution proposed by the board's chair, Michael Honeycutt, of the Texas Commission on Environmental Quality.

"What I'm hearing is that the Clean Water Act says something that the science has surpassed, and we are trying to fit a square peg into a round hole," he said. "I see the position EPA is in. It's sort of like a cycle, and you're trying to draw a line of where the cycle begins, and it's very difficult to do. Your policy is drawing that line, and it's an unenviable position to be in."

Steven Hamburg, of the Environmental Defense Fund, agreed to the commentary but cautioned against "just putting a new cover letter" on old comments.

While the science hasn't changed, he said, "the context has changed."

"We need to address the new set of options that are on the table," he said.

Board members spent some time discussing the working group's recommendations for WOTUS. Those include that EPA and the Army Corps should consider the "scientific basis" for excluding ephemeral waters that flow only after rainfall and wetlands without a direct

surface water connection to larger waters. The group also recommends considering "the scientific importance of groundwater protection and groundwater," noting that the WOTUS proposal would protect spring-fed creeks but not isolated waters or wetlands with shallow subsurface groundwater to larger waterways that have previously been protected.

Consultant Richard Williams asked whether those recommendations were based on how waterways are connected or "what the risk was, basically, of including or excluding it."

Hamburg explained that the analysis stuck to how wetlands and streams are connected to larger water bodies, largely because of how the Clean Water Act is framed. But he stressed the importance of not focusing on the impact one ephemeral stream or wetland might have on a larger water body.

"One might be very small, but the collective influence is very large and tends to drive the chemistry as well as the hydrology of these systems," he said.

Twitter: @arielwittenberg Email: awittenberg@eenews.net

Return to Top

States

S&P Global Platts
June 6, 2019

California ISO plans quick fix for EIM cost redistribution issue

By Kate Winston

California Independent System Operator on Thursday outlined a plan to quickly fix an issue that stakeholders say unfairly shifts costs among the members of the Western Energy Imbalance Market , a matter linked to the way the state accounts for the cost of its greenhouse gas policies.

The problem is significant because it ends up redistributing millions of dollars per quarter among EIM members.

And accounting for GHG programs in the EIM is only going to get more complicated as more western states roll out their own plans.

The issue is related to the way that the ISO carries out real-time market neutrality settlement, which helps the grid operator balance its books. At the end of the day, the money the ISO collects does not exactly match the money it pays out because, for example, sometimes load or generation is not exactly what was predicted.

So the real-time market neutrality settlement accounts ensure the ISO is revenue neutral by allocating these leftover costs and charges among balancing authority areas based in part on the value of their transfers. But this accounting has been inadvertently inaccurate because the ISO measured the value of transfers between BAAs to include the cost of complying with California ’s GHG rules, even if the transfer did not go to California .

Settlement problem

Idaho Power and PacifiCorp brought the issue to the ISO’s attention and the grid operator is now working to quickly fix it. The ISO plans to no longer perform the real-time imbalance

energy offset transfer adjustment; provide a credit for GHG costs for transfers between non-California BAAs when calculating the value of EIM transfers; and clarify the submission process for certain schedules.

If the changes had been in effect for the first quarter of 2019, there would have been $9.2 million less redistribution between BAAs in the EIM, and five BAAs would have received a higher charge and four would have received a lower charge, the ISO said.

When it comes to the first two changes, the ISO plans to submit a proposal to the US Federal Energy Regulatory Commission on July 31 with a requested effective date of August 1, it said during a Thursday web conference. The third would be carried out through a manual business practice change.

More work requested

The ISO should move forward with the proposed fixes, but it should also continue discussing the matter because there could be other lingering issues that are not addressed by the proposal, Kallie Wells from Gridwell Consulting, who represents the Western Power Trading Forum, said in an interview Thursday.

Meanwhile, Powerex is worried the problem goes well beyond the scope of the proposal. The settlement process appears to negate compensation for GHGcompliance and intra-hour flexibility, Powerex said in comments on a draft of the proposal. The ISO should carry out a more thorough review of settlement issues and consider retroactive corrections, Powerex said.

Return to Top

S&P Global Platts
June 6, 2019

ERCOT's monitor proposes fixes on reliability issues, CRR markets, transmission

By Mark Watson

The Electric Reliability Council of Texas ' independent market monitor submitted new recommendations on deployment and compensation of generation for reliability, congestion revenue rights markets, and transmission constraints in its final 2018 State of the Market Report.

Potomac Economics notified market participants late Wednesday that it had filed the report at the Public Utility Commission of Texas . The report "reviews and evaluates the outcomes" of ERCOT 's wholesale electricity markets and assesses the incentives in current market rules and analyzes market participant behavior.

The report notes that the "wholesale market performed competitively in 2018," with an 8% increase in the average natural gas price , to $3.22/MMBtu, combining with historically tight supply conditions to boost the systemwide load-weighted average energy price by about 26% to $35.63/MWh.

However, "a costly localized constraint" in ERCOT 's transmission system in far West Texas contributed to a 30% jump in congestion costs, shooting up to $1.26 billion.

"Although the market performed competitively, we continue to recommend a number of key improvements to ERCOT 's pricing , resource commitment process, and dispatch," the report

states.

One of the new recommendations is to “evaluate and improve the Reliability Deployment Price Adder,” a mechanism for mitigating the price effects of dispatching generation on a “reliability unit committed” basis, in order to resolve a transmission constraint. The price adder should “produce prices sufficient to have encouraged a competitive resource to commit and produce energy,” but does not now do so, the report states.

Also, resources that are held in reserve should not be paid the RDPA, which they are now, the report states.

The IMM also recommends that ERCOT stop allowing generators to opt out of their RUC instructions and instead commit on an economic basis, because the current market rules provide an “incentive for generators to defer the decision to self-commit as long as possible with no risk.”

Congestion revenue rights

Regarding congestion revenue rights, which other markets call financial transmission rights, the report recommends that ERCOT “evaluate and improve the Load Distribution Factors used in the Congestion Revenue Right and Day-Ahead Market clearing activities."

A load distribution factor is, in general, a ratio of the average load over a particular line in comparison with its total capacity, and it typically varies by time of day, season and location. The LDF is a parameter used in settling CRR and DAM revenues and costs.

“Our concern with the current LDF procedure is that it is entirely backwards looking (i.e., using the most recent hot day profile),” the report states. “There are challenges transitioning that process to be more forward looking, such as being able to accurately predict the month that a load is going to come online, but the IMM views those challenges as worth addressing.”

The last of the new recommendations pertains to a long-time goal of the IMM: real-time co-optimization of energy and ancillary services, which the PUC directed ERCOT in January to begin implementing as soon as possible.

“As the demand curves for each type of reserve service (potentially including locational reserve products in the future) are being evaluated under a co-optimized system, it is a good opportunity to also evaluate transmission penalty curves,” the report states.

The recommendation suggests that as “the value of lowering the flow of electricity on transmission line increases” as the excess voltage increases, “this should be reflected in energy prices .”

“Given that congestion costs were over $1B in 2018, the IMM recommends that a more nuanced approach to how transmission security affects pricing be evaluated,” the report states.

Return to Top

The Energy Daily
June 7, 2019

Texas creates cybersecurity monitor for power grid

BY JEFF BEATTIE

Advancing what proponents called the state’s first grid protection legislation, Texas lawmakers last month passed a package of bills designed to thwart cyber attacks on the state’s

transmission, distribution and generation assets, including with the creation of a new "cybersecurity monitor" organization to oversee utility safeguards and practices on behalf of the Public Utility Commission of Texas.

In another important change, the legislation requires that the commission allow utilities to bill customers for necessary and reasonable costs stemming from work to protect their systems from cyber threats. While state utility commissions tend to look favorably on such expenditures, Texas lawmakers clearly intend to further encourage utilities to invest in protective systems and coordinate with regulators and other stakeholders on cybersecurity.

The passage of the legislation appears to place Texas in the forefront of state action on grid cybersecurity as the only state with a designated watchdog on those issues. However, the initiative also reflects Texas' unique status as the only state that regulates virtually all aspects of its power system.

While the nation's other wholesale power markets are overseen by the Federal Energy Regulatory Commission under the Federal Power Act, the Texas grid is exempt from FERC supervision except for matters affecting other states. The state's grid is run by the Electric Reliability of Council of Texas (ERCOT), which answers only to the Public Utility Commission of Texas (PUCT).

On cybersecurity and other reliability requirements, however, ERCOT is subject to oversight of the FERC-supervised North American Electric Reliability Corp., just like other U.S. utilities and grid operators.

There have been no reports of high-profile cyber attacks on the Texas grid, although the Energy Department recently disclosed a March 5 "cyber event that caused interruptions of electrical system operations" in parts of California, Utah and Wyoming.

An ERCOT spokeswoman said the grid operator was "not aware of any specific incidents that resulted in the passage of the [cybersecurity bills]."

DOE documents show five electric "disturbances" in Texas between January 1 and the end of March, but does not identify any as cyber-related. Instead, the disturbances are described as problems with system operations, vandalism and severe weather.

Texas lawmakers have been pushed on the cybersecurity issue by a number of advocacy groups, including an active one known as Protect the Texas Grid, which hailed one of the newly passed bills (SB 475) as "the first grid protection bill in Texas history." Many of the changes enacted by Texas lawmakers were specifically requested by the PUCT in an annual report the legislature.

The package of three cybersecurity bills passed the Texas Senate May 15 and 17, and await the signature of Gov. Gregg Abbot (R) who is likely to sign them, according to Texas sources.

SB 475 would establish a Texas Electric Grid Security Council to develop cybersecurity best practices for dissemination to electric utilities. The council will be comprised of ERCOT's CEO, a representative from the governor's office and a member of the PUCT.

A second bill (SB 936) would require ERCOT and the PUCT to hire a third party as a cybersecurity monitor that would be given a broad role in overseeing safeguards for the state's grid.

According to a bill summary produced by Texas House researchers, the monitor would manage a comprehensive cybersecurity outreach program for utilities; "meet regularly with monitored utilities to discuss emerging threats, best business practices, and training opportunities;" review utilities' self-assessments of their cybersecurity efforts if voluntarily

disclosed; “research and develop best business practices on cybersecurity; and report to PUC on monitored utility cybersecurity preparedness.”

The monitor’s work would apply to transmission and distribution utilities and wholesale power retailers working on behalf of public power and water authorities. The monitor also would coordinate with certain municipally owned utilities or electric cooperatives that either operate inside the ERCOT power region or those that “operate solely outside of the ERCOT power region and elect to participate in the program.”

While ERCOT covers the majority of Texas, a small portion of eastern Texas is in the market run by the Midcontinent Independent System Operator (MISO) and the Southwest Power Pool oversees a larger portion of northwestern Texas.

A third bill, SB 64, would assign the PUCT a direct cybersecurity monitoring role alongside the new coordinator. It requires the commission to establish a program monitoring cybersecurity initiatives among transmission and distribution utilities, including investor-owned utilities, co-ops, munis and competitive power retailers.

SB 64 also requires ERCOT to conduct an internal cybersecurity risk assessment, vulnerability testing, and employee training on cybersecurity.

Return to Top

Sacramento Bee
June 6, 2019

Psst. PG&E’s top leaders expected in Paradise and Chico, but post-wildfire tour is secret

BY DALE KASLER

The top leaders of PG&E Corp. were believed to be visiting Chico on Thursday as part of tour that would take them to Paradise on Friday to inspect damage from the Camp Fire.

But officials in both cities said they’ve been unable to get any details about the visit, which was ordered by the federal judge overseeing the utility’s criminal probation. The judge said he wanted PG&E officials to meet with city officials, firefighters and others to understand the devastation of last November’s fire.

Paradise Mayor Jody Jones and Town Council member Michael Zuccolillo said they met with PG&E Chief Executive Bill Johnson when he toured their town privately about two weeks ago. At the time, Johnson told them he and the PG&E board of directors — a group of 13 high-powered financial and energy executives — would visit Friday.

Since then, however, they’ve been kept in the dark, “which is really weird,” said Paradise Mayor Jody Jones. “I don’t know if they want a private visit and no press around.”

The group is believed to be spending part of Thursday in neighboring Chico, said Chico City manager Mark Orme. But Orme said he hasn’t been contacted by the company and he had no details about the Chico portion of the visit. Thousands of Paradise residents who lost their homes in the Camp Fire have relocated to Chico, putting a strain on city services.

PG&E spokesman James Noonan declined comment Thursday, referring a reporter to the U.S. Probation Office, which is coordinating the trip.

A spokeswoman for the department, Lynn Fuller, said in an email: “For security reasons, the Court will not at this time say when or where the event will be or whether it has already occurred; the Court will release a further statement in due course.”

Zuccolillo said he’s bothered by the lack of information about the trip. “The council doesn’t even know,” said the Paradise council member. “It’s very frustrating to me.” Zuccolillo and Jones were among those whose homes were destroyed in the fire, the deadliest in California history.

Cal Fire has declared that November’s Camp Fire, which killed 85 people and destroyed 90 percent of Paradise’s housing stock, was caused by malfunctioning PG&E equipment.

Last month U.S. District Judge William Alsup, who has been critical of PG&E’s safety record, ordered Johnson and the board of directors to tour Paradise by mid-July. In his written order, Alsup told the executives to get “a firsthand understanding of the harm inflicted on those communities and meet with victims and others stakeholders, such as fire-fighting personnel and/or city officials.”

Alsup has taken a supervisory role in PG&E’s affairs because the company is on probation after being found guilty in connection with the 2010 pipeline explosion that killed eight people in San Bruno.

Johnson became PG&E’s CEO in April after a long tenure as head of the Tennessee Valley Authority, a government-owned electric utility. On May 15, the same day Cal Fire officially blamed PG&E for the Camp Fire, Johnson told an Assembly committee in Sacramento that PG&E needs to become accountable to customers and wildfire victims.

“The first thing that I’m going to do is bring an intense focus back to the fundamentals of operating a utility system,” he said.

The company has pledged to spend $105 million helping Camp Fire survivors with living expenses.

Facing an estimated $30 billion in liabilities from the Camp Fire and the 2017 wine country fires, PG&E filed for bankruptcy in January. The company has come under intense pressure from state officials to reform its corporate culture and improve its safety record.

At about the same time Johnson took over, the company overhauled its board of directors to put a greater emphasis on leaders with expertise in utility safety. The new board chairwoman is Nora Mead Brownell, a former commissioner of the Federal Energy Regulatory Commission.

But its board also includes several executives from the world of finance, causing Gov. Gavin Newsom and other state officials to accuse the company of putting profits ahead of safety. Among the directors are Richard Barrera, founder of New York hedge fund Roystone Capital Management; Kenneth Liang, a former managing director with Los Angeles investment firm Oaktree Capital Management; and Eric Mullins, co-CEO of Lime Rock Resources, an energy-investment firm based in Houston.

Return to Top

International/Misc.

Nikkei Asian Review
June 7, 2019

American LNG exports threatened as China turns to Russian sources

Trade war with Beijing shakes Washington's 'energy independent' policy
RURIKA IMAHASHI, Nikkei staff writer

TOKYO -- China's efforts to wean itself off U.S. energy is raising concerns that American producers will be left with a glut of liquid natural gas and, consequently, investment delays in planned projects.

China raised retaliatory tariffs on LNG from the U.S. to 25% on June 1 after Washington's recent decision to increase tariffs on most Chinese goods. The move, which could see a buildup of American LNG, casts fresh doubts about the country's energy export strategy.

For the year through March, China accounted for only 2% of America's LNG exports, according to data from the U.S. Census Bureau.

Instead, China is looking for other source, namely Russian. In April, state-owned China National Petroleum Corp. and China National Offshore Oil Corp. each agreed to buy 10% stakes in Russian Novatek's massive Arctic LNG 2 project.

"These new deals further cement the Chinese-Russian gas relationship in a year when the first sales of Russian gas to China through Gazprom's Power of Siberia project begin," said Nicholas Browne, director of gas and LNG research at Wood Mackenzie.

Sinopec, Novatek and Gazprombank on Wednesday also signed an agreement to establish a joint venture to sell LNG to Chinese end users after Russian President Vladimir Putin's talks with Chinese President Xi Jinping in Moscow.

The deal "opens opportunities for investing in the development of the end-consumption segment on one of the largest and the most quickly growing gas and LNG market across the globe," said Novatek CEO Leonid Mikhelson.

The shifting landscape clouds the optimism expressed by U.S. President Donald Trump just weeks ago. "You will very soon be exporting clean American natural gas all over the globe," said Trump in mid-May, speaking to workers at Cameron LNG in the state of Louisiana, which began gas production last month.

The president stressed that the workers made the country wealthier and "safer by making American energy independent." Trump added, "We don't need anybody."

Creating energy projects and generating jobs in the industry help politicians score points with constituents. This year, the Federal Energy Regulatory Commission has authorized four projects to construct and operate LNG export facilities.

"This year will likely see four or five more projects approved," said Hiroshi Hashimoto, senior analyst at Japan's Institute of Energy Economics. But he warned that slowing demand from China could "delay final investment decisions on the projects."

American LNG ventures involving Chinese investors are mired in uncertainty, held hostage to the ongoing U.S.-China trade war.

A joint development agreement for LNG production in the U.S. state of Alaska was supposed to be signed in December but is now on hold. The agreement -- between state-affiliated Alaska Gasline Development Corp. and China's Sinopec, Bank of China and China Investment Corp. -- would hand the Chinese 75% outtake rights to a $43-billion natural gas project.

The planned project is one of a number in the U.S. that arose "in anticipation of China's increasing demand," said Mika Takenaka, director of the energy research division at Japan Oil, Gas and Metals National Corporation.

But since many major Chinese energy giants are state-owned, the political winds of change affect Beijing's energy purchases. Owing to Sino-U.S. tensions, these companies are now reluctant to invest in, and make a long-term contracts with, American suppliers.

PetroChina signed a 25-year purchase deal with U.S. giant Cheniere Energy in February 2018, but since the trade war escalated, has refrained from importing American LNG.

The U.S. kicked off the trade war by slapping tariffs on Chinese goods in July 2018, to which China responded two months later with 10% tariffs on American LNG and other goods.

China's demand for LNG has surged partly because of its embarking in 2018 on an aggressive three-year plan to tackle the country's notorious air pollution by phasing out reliance on coal, quickly becoming the world's second-largest importer of LNG.

Roughly 15% of American LNG exports went to China in 2017, as Beijing hoped that its large energy purchases from the U.S. would deflect Washington's criticisms over the trade deficit with its Asian buyer.

But since the tariff tit for tat, China has received only four shipments of LNG, compared with the 35 between September 2017 and April 2018. This is despite the 32% growth in Chinese LNG imports and 38% increase in U.S. exports, according to Browne at Wood Mackenzie.

Browne noted that China's LNG demand this year will reach nearly 63.2 million tons, and hit about 81.5 million tons in 2025.

LNG traders have remained generally calm during the trade dispute. "We see limited fallout on LNG prices from current U.S.-China tensions," said a representative of Japanese trading house Mitsui & Co.

Meanwhile, U.S. natural gas suppliers have been adjusting output to cushion the impact of the dispute. Shell, for instance, distributes LNG from different regions around the globe, which reduces the company's dependence on U.S. output.

But decreasing Chinese demand will continue to stymie growth in the U.S. energy sector. With China buying far less American LNG, Washington is pressuring Europe to pick up the slack.

Spot LNG prices in Asia stand at around $4.50 per million Btu, down 49% from January. Prices have been relatively stable over the past few months at the $4 to $5 level. A prolonged trade war, however, could put more pressure on prices over the long term.

Return to Top

From: Celeste Miller on behalf of MediaDL
To: NewsDL
Subject: June 10 news clips
Date: Monday, June 10, 2019 8:12:40 AM

DAILY
NEWS CLIPS
OFFICE OF EXTERNAL AFFAIRS
FEDERAL ENERGY REGULATORY COMMISSION

Monday, June 10, 2019 Visit our News Clips website

TOP STORIES

Energy Commission at Odds Over Who Among Them Is More Partisan
After near miss in court on GHG considerations, debate endures at FERC
House Democrats to press FERC on climate concerns
General counsel espouses regulatory humility, eyes open seat
FERC general counsel being eyed for commission?
PG&E Can Pull Out of Green-Power Contracts

ELECTRIC

LS Power complaint seeks 'clear path' for smaller transmission projects in MISO
How much credit can Beyond Coal claim for plant closures?
The Time Is Ripe For Aggregation Of Behind-The-Meter Assets

GAS/LNG/OIL PIPELINES

Pipeline update: Where these 2 projects through the Lehigh Valley stand, amid continuing Pa. natural gas boom
FERC on Jordan Cove comments: Take a number
East Texas natural gas could get boost from pipeline, terminal project
The Great LNG Debate: A growing industry faces stiff, organized opposition in the Rio Grande Valley
Natural gas is helping combat climate change — but not enough

HYDRO

After lengthy permit process, Lake Powell Pipeline ready for next step

OTHER AGENCIES

EPA tries to limit state authority to block pipes
EPA curbs state power to deny permits for climate concerns
Gas sector applauds as EPA provides guidance on state water reviews

STATES

As its leaders tour Paradise, PG&E warns it may cut power amid extreme CA fire risk
PG&E warns of power cuts amid extreme wildfire risk in northern California

INTERNATIONAL/MISC.

Top Stories

Bloomberg
June 7, 2019
Energy Commission at Odds Over Who Among Them Is More Partisan

By Stephen Cunningham
(Bloomberg) -- Since day one, Neil Chatterjee has fended off criticism that he's too partisan to lead the politically independent Federal Energy Regulatory Commission. But the real ideologue on the commission, according to Chatterjee, is Democrat Rich Glick.

"If we are going to talk about politics infecting the agency's work, let's be fair in seeing who is it that's actually being political," Chatterjee said in an interview. Glick has been "unwilling to compromise on his ideology," he said. "I am compromising to get things done and accomplished. I don't know that that can be said of all my colleagues."

Chatterjee's remarks -- made after he was criticized for promoting LNG exports as "freedom gas" -- are the latest example of partisan discord at the agency long known for its political neutrality. The growing tension has raised concerns about potential deadlocks and the future of natural gas project permits.

Glick, one of two Democrats on the five-seat panel, has voted against all of the liquefied natural gas applications that have come before the agency this year, submitting lengthy dissents centered on environmental issues. That hasn't stopped the projects from moving forward.

"I am ready and willing to negotiate with the majority on the issue of climate change and natural gas infrastructure facilities at any time," Glick said in an email. "Unfortunately, the majority has shown no interest in negotiating with me in those cases."

Return to Top

Inside FERC
June 10, 2019

After near miss in court on GHG considerations, debate endures at FERC

By Maya Weber

A key appeals court ruling last week looks unlikely to bridge the division at the Federal Energy Regulatory Commission over environmental reviews in pipeline cases.

The DC Circuit Court of Appeals Tuesday upheld on procedural grounds FERC orders in a case testing the agency's greenhouse gas considerations in natural gas pipeline reviews, but the court expressed "misgivings" about FERC 's "decidedly less-than-dogged" efforts to obtain information for its National Environmental Policy Act review.

In Lori Birckhead, et al., v. FERC (18-1218), a three-judge panel concluded it lacked jurisdiction to rule based on those misgivings. The petitioners failed to raise questions at the appropriate time about the effort to seek information needed, the court said.

FERC 's approach to weighing indirect GHG emissions associated with gas projects has divided commissioners, adding uncertainty about FERC 's ability to issue the certificate orders that projects need to advance.

At issue in the case was Tennessee Gas Pipeline 's Broad Run Expansion, a compression project which would add 200,000 Dt/d of capacity for moving Appalachian shale gas to Southeast US markets. The petitioners questioned whether FERC 's orders ran counter to the court's findings in Sierra Club v. FERC , a case involving the Sabal Trail Transmission pipeline , by failing to consider upstream and downstream GHG emissions .

The court denied the petition.

Origins, end uses

It was dubious about FERC 's assertions on why it did not seek more information from project developers on end uses of the gas or locations of the upstream origins of the gas . "It should go without saying that NEPA also requires the commission to at least attempt to obtain the information necessary to fulfill its statutory responsibilities," the court said.

The court also rejected the line of reasoning from FERC that it need not consider downstream GHG emissions if the agency cannot be considered a legally relevant cause of those emissions .

"[T]his line of reasoning gets the commission nowhere," the court said, since FERC has such authority in the context of pipeline certification. "Because the commission may … deny a pipeline certificate on the ground that the pipeline would be too harmful to the environment, the agency is a 'legally relevant cause' of the direct and indirect environmental effects of pipelines it approves — even where it lacks jurisdiction over the producer or distributor of the gastransported by the pipeline ," it said.

Under questioning from judges, FERC Solicitor Robert Solomon appeared to back off of that argument during April 11 oral argument in the case. But in an unusual turn of events, General Counsel James Danly and Solomon later wrote the court to say Solomon misspoke and that FERC 's position remained that jurisdictional limitations in the Natural Gas Act "break the causal chain" for NEPA purposes in most circumstances. The court rejected that argument.

Approach is lawful: Chatterjee

For now, the ruling did not appear to bridge differences among the commissioners, based on their disparate responses to the court finding.

"The holding of the case was that our current approach is lawful, and we will continue our

current approach," Chairman Neil Chatterjee said on the sidelines of the annual Nuclear Energy Assembly and Supplier Expo.

As to the court's dissatisfaction with FERC 's information gathering, Commissioner Bernard McNamee said in an interview that FERC is already asking a number of the questions identified in the court opinion. "In the summer of 2018, the commission had already begun asking more questions about end use for the gas ," he said.

The panel's Democrats read the court language as backing some of their fundamental positions in the recent tug of war, even if FERC 's orders were ultimately upheld.

Commissioner Richard Glick, who has dissented in gas project cases, said the ruling "unambiguously affirms FERC 's obligation under NEPA and the NGA to consider the reasonably foreseeable upstream and downstream GHG emissions caused by an interstate natural gas pipeline ."

"Although the court denies the petition on procedural grounds, the opinion puts to bed any suggestion that NEPA and the NGA do not permit FERC to seriously consider the GHG emissions caused by a pipeline ," Glick said.

And Commissioner Cheryl LaFleur, a key swing vote at FERC , asserted the ruling "recognized that the commission can and should build a more complete record on upstream and downstream impacts." The commission must consider these climate impacts in its NEPA analysis and as part of its public interest determination under the NGA, she said. "I hope the commission acts on this guidance, rather than perpetuating the legal risk that it narrowly avoided in this case."

'Policy agenda'

Glick also said the ruling "rejects FERC 's effort to hide behind artificial limits on its jurisdiction as a basis for ignoring a pipeline 's effect on climate change."

McNamee, on the other hand, said climate change was never mentioned in the decision.

"That goes to my fundamental issue that our job is to look at the facts and the law in each case and not be perceived as prejudging any particular issue," McNamee said. "It's important for our system of government that when people come before a tribunal like us or like the DC Circuit that they have confidence that particular case will be considered. Whether it's through a Twitter storm or through a law review article, I don't think that gives confidence to the regulated community that their cases are going to be analyzed on the facts and law in that particular case."

The commission has an obligation to look at the facts and the record before it, "not pursue a policy agenda separate from what the cases are," he continued. Still, McNamee said he is "always willing to work with my colleagues to try to find common ground."

Friction at the commission continued Friday.

A spokesman for Glick took Chatterjee's statement that FERC would continue its approach as a barrier to compromise, highlighting "a fundamental disagreement" on this issue.

Glick has said he hoped to work with all of his colleagues to reflect the court findings. "We 're always willing to negotiate, its just that the majority is unwilling to do so," the spokesman said.

A day earlier Chatterjee was quoted saying Glick was "unwilling to compromise on his ideology."

Mike McKenna, an energy lobbyist who heads MWR Strategies, worried about the continued

tensions. "The longer this goes on, the longer one or both parties feels aggrieved, the less likely you are to have a meaningful decision-making process at the commission," he said.

Major battleground

The question of how and when FERC should consider downstream emissions has been a major battleground at FERC .

In this case, the court found that “neither side has it exactly right” in applying the court’s prior Sierra Club finding that FERC had not done enough to consider downstream emissions from power plants served by Sabal Trail and two related projects.

FERC is wrong to suggest downstream emissions are not reasonably foreseeable simply because the gas transmitted may displace existing supplies or higher-emitting fuels, the court said. And FERC too narrowly construed Sierra Club to apply when a project’s entire purpose is to ship gas to specifically identified destinations, it added.

But petitioners went too far in claiming downstream combustion was always a reasonably foreseeable indirect effect of a pipeline , the court said.

As for upstream emissions , the court found petitioners did not adequately counter FERC ’s argument that unless a pipeline project is the only way to get gasto market, there is not a reasonably close causal relationship to the indirect impacts.

The petitioners offered no record evidence that would help FERC predict the number and location of added wells, and offered no evidence that the producer, Antero, would not extract the gas in absence of the project, the court said.

More data requests

Gillian Giannetti, an attorney with Natural Resources Defense Council, suggested on Twitter the court attacked every argument that underpins FERC climate policy outlined in its May 2018 rehearing decision on Dominion Energy ’s New Market Project.

Gary Kruse of LawIQ called the decision “a definite rebuke of the current majority position” at FERC . The opinion offers a strong hint that NEPA requires FERCto ask applicants about the downstream use of the gas , he said. In addition, if the applicant provides an answer, there is a strong hint that there is no legal reason why that would not be an indirect impact, and FERC must determine this on a factual basis considering the particulars in the case, he said. There was no hint, however, as to what FERC must do if it determines that GHGs are an indirect impact from the project, he added.

William Scherman, a partner with Gibson, Dunn & Crutcher, said the makeup of the DC Circuit panel was “very challenging” for FERC , and “the fact that the commission won at all speaks volumes about FERC 's overall record and credibility on NEPA issues.”

Scherman disagreed with the ruling on one key aspect: “It is simply wrong to say again that the procedural statute NEPA represents can expand the FERC ’s jurisdiction into areas Congress has removed from FERC jurisdiction,” he said. “The FERC has no upstream or downstream jurisdiction to address the alleged GHG indirect effects,” and the commission cannot tell a state it can’t use gas for generation purposes to mitigate alleged GHG indirect effects, he added.

“Clearly this whole approach in the end is designed to leave the FERC with only one option: simply deny the certificate,” he said.

Howard Nelson, attorney and DC shareholder at Greenberg Traurig, said the ruling may not change the commission’s policy other than to prompt FERC to ask more questions about

where the gas is going and make a good-faith effort to ascertain that information. The answers may be clearer if the shipper is an electric power plant versus a producer selling gas into the spot market or local distribution company, he suggested.

FERC given 'a pass'

Carolyn Elefant, who argued the case in the DC Circuit on behalf of landowners, said the court's criticism of FERC 's approach drew upon her arguments, and clearly found enough fault to remand the case to the agency.

She was frustrated by the court's finding that she did not raise the issue of FERC asking for more information at the appropriate time during commission proceedings. The original FERC order came out in June 2016, preceding the Sierra Club decision, and FERC had argued it had no obligation to ask for the information because the downstream GHG emissions were not indirect impacts, she said.

The ruling turns NEPA on its head, she contended. "FERC should be the one who has to say what information it needs," rather than requiring the petitioners to demonstrate that, she said.

She worried the ruling allows FERC to flout what the court said in Sierra Club . The court's finding tells FERC , "You're wrong, but we 'll give you a pass," she said.

Return to Top

E&E Daily
June 10, 2019
ENERGY POLICY

House Democrats to press FERC on climate concerns

Jeremy Dillon, E&E News reporter

Members of the Federal Energy Regulatory Commission will be on Capitol Hill on Wednesday, and House lawmakers will have the opportunity to press them on climate concerns.

The hearing before an Energy and Commerce subcommittee marks the first appearance of FERC members since Democrats took control of the House and comes a little over a year since the commission appeared before the same subcommittee for a fiscal 2019 budget hearing in April 2018.

For Democrats, the oversight hearing will offer a chance to press the regulatory body and Republican Chairman Neil Chatterjee on a series of pending policy considerations, chief among them climate change.

"FERC is a relatively small agency with an enormous impact on our nation's energy and environmental future," said Energy and Commerce Chairman Frank Pallone (D-N.J.) and Energy Subcommittee Chairman Bobby Rush (D-Ill.) in a joint statement.

"FERC's work directly impacts not only energy policy and prices, but also climate change, consumer protection and the disposition of private lands. We look forward to discussing these issues with the commissioners and hearing their plan for addressing the growing challenges in the energy sector," the duo added.

House Democrats have looked to raise the awareness of issues pending before FERC. That has even included two filed amendments to the Energy-Water title of the fiscal 2020 spending minibus under consideration this week on the House floor (see related story).

Those amendments are a Rep. Mike Levin (D-Calif.)-led effort to direct FERC to complete its ruling on distributed energy sources on the grid and a Rep. Jared Huffman (D-Calif.) measure to limit the use of funds "to issue permits inconsistent with a court case requiring review of the impacts of new natural gas pipelines on climate change," according to the amendment description.

The climate issue has been a familiar refrain at FERC as the commission grapples with how much greenhouse gas analysis is appropriate for its environmental reviews, especially for pipelines and liquefied natural gas export terminal permits.

Republicans on the commission have said the climate considerations are not needed, but Democrats, led by Commissioner Richard Glick, have made more noise about the need for FERC procedure on this, pointing to a series of court cases challenging FERC's climate responsibilities.

Chatterjee may already have a defense in a recent court decision that threw out a challenge to a FERC pipeline decision.

"I think the holding of the case was that our current approach is lawful, and we will continue our current approach," Chatterjee told reporters after his speech at a nuclear energy conference last week.

For Republicans, the FERC hearing is likely to provide an ample platform to cheerlead the series of LNG export terminals approved by the commission since February, with lots of references to "freedom gas" — Energy Secretary Rick Perry's nickname for U.S. LNG exports.

Schedule: The hearing is Wednesday, June 12, at 10:30 a.m. in 2322 Rayburn.

Witnesses:

FERC Chairman Neil Chatterjee.

Commissioner Cheryl LaFleur.

Commissioner Richard Glick.

Commissioner Bernard McNamee.

Twitter: @JeremyDillonDC Email: jdillon@eenews.net

Return to Top

EnergyWire
June 10, 2019
FERC

General counsel espouses regulatory humility, eyes open seat

Rod Kuckro, E&E News reporter

When James Danly, the general counsel of the Federal Energy Regulatory Commission, confronts an issue, he looks at it through the lens of a legal theory all his own.

He calls it the "humble regulator."

In essence, it means a regulator shouldn't exercise the full extent of an agency's jurisdiction, according to several people who have heard Danly talk about it on more than one occasion.

At FERC, that means a very narrow reading of the Federal Power Act and Natural Gas Act with a hesitancy to use the agency's discretion to interpret those and the other statutes under which it operates, they said.

It is a departure from legal thinking that has long governed FERC under chairs of both political parties.

Danly's credo draws on core tenets of the Federalist Society, an influential group of conservatives and libertarians who believe a regulator's job is to stick to the text of a law and not what it should be, said several attorneys who practice before FERC.

His views "take on added significance and relevance," as he is a leading candidate to fill the vacancy at FERC created by the death of Commissioner Kevin McIntyre in January, said a Washington industry power-sector source who asked to remain anonymous.

Danly is described by former colleagues at the law firm Skadden, Arps, Slate, Meagher & Flom as "very bright" and possessing a "sharp legal mind."

FERC declined multiple requests for interviews, as did Danly, including questions about how his legal philosophy plays into how he does his job at the commission.

He is only the second FERC general counsel to be a political appointee and the first not to have been chosen by the chairman.

Danly, 43, was placed at FERC in September 2017 by the White House just a month after Neil Chatterjee, a Republican, was named chairman.

Danly is a relative newcomer to the law, having graduated from Vanderbilt Law School in 2013 after serving in the Army.

Before being named general counsel, Danly worked as an associate in Skadden's Energy Regulation and Litigation Group. Prior to that, he was a clerk to Judge Danny Boggs at the 6th U.S. Circuit Court of Appeals and served as a managing director of the Institute for the Study of War, a military think tank in Washington, D.C.

By contrast, previous FERC general counsels have had long careers either with the commission or in the energy industry before becoming the top lawyer in an agency that employs hundreds of lawyers.

Close alliances

Danly is getting close support in the general counsel's office from two lawyers formerly with Skadden's Washington office.

Partner Matthew Estes left Skadden after more than 30 years and became a legal adviser to Danly in February 2018.

He was followed by Skadden's counsel John Shepherd, who had nearly 18 years at the firm when he jumped to FERC in April 2018 to become Danly's director of legal policy.

FERC did not immediately respond to a request for comment about the two lawyers and would not say whether they are political appointees or career civil servants.

Estes and Shepherd often accompany Danly to important meetings and are equal participants, according to three sources in the Washington legal world who have seen the men in meetings together. Those sources asked to remain anonymous to speak freely.

But Danly is said by one FERC source to be "fully engaged at policy meetings," where he'll ask "incisive" questions.

Still, the presence of two lawyers from the same firm as the FERC general counsel functioning as his chief advisers is unprecedented at the commission, according to a handful of former FERC general counsel office employees.

Danly spoke about his belief in the "humble regulator" on April 30 during a keynote speech to Skadden's Energy Regulation and Litigation Group's 14th Annual Energy Conference in Washington.

Reflecting on his study of classics while an undergraduate at Yale University, Danly "gave an interesting talk in which he spun a cautionary tale on the proper role for a regulator by drawing parallels to the end of the Roman Republic," one attendee said.

Danly "asserted that Rome ceased to be a Republic as it gradually ignored its unwritten Constitution." He also acknowledged the possibility of FERC engaging in generic rulemakings, the source said, but said it should be very rare and aimed at curing obvious problems.

And Danly expressed a strict reading of federalism in which the states are recognized as supreme sovereign entities.

"In this context it's impossible to imagine [FERC] doing" Order 888 in 1996 for open transmission access or an Order 636 that in 1992 made the unbundling of natural gas pipeline services possible, said a former senior FERC official.

"The idea [of the humble regulator] is to do in an order what is needed and avoid being prescriptive in ways that may intrude on the management discretion and creativity of regulated companies," said Richard Sedano, president and CEO of the Regulatory Assistance Project.

For example, in deciding a "key policy direction consistent with underlying statutes" such as directing a utility to do more transparent distribution planning, "specific details to implement the direction are left to companies, and can be course corrected later," Sedano said.

Signs of Danly's approach

Evidence of Danly's belief in the "humble regulator" theory might be found in his leading the commission last year to abandon the approach it had employed toward evaluating the effects of downstream greenhouse gas emissions from natural gas projects, using authority found in the National Environmental Policy Act.

That hands-off approach to performing greenhouse gas analysis has been repeatedly criticized by Commissioners Cheryl LaFleur and Richard Glick, both Democrats.

And last week, the U.S. Court of Appeals for the District of Columbia Circuit chastised FERC for its "decidedly less-than-dogged efforts to obtain the information it says it would need to determine that downstream greenhouse-gas emissions qualify as a reasonably foreseeable indirect effect" of a project (***Energywire***, June 5).

Danly's less-is-more approach appears to be in line with Chatterjee's not advancing a host of issues on FERC's docket, some of which have languished for more than a year.

Scott Segal, an energy lawyer at Bracewell LLP, said the term "humble regulator" seems to be synonymous with the term "modest government."

"As I understand it, it's when you're confronted with a statute that you're seeking to implement, you stick as close as possible to the exact meaning of that statute and you don't engage in the sort of speculative regulation that you might if you embraced the longtime precedent in administrative law under the *Chevron* case."

Chevron USA Inc. v. Natural Resources Defense Council is a 1984 landmark case in which the Supreme Court ruled that courts should defer to a government agency in the interpretation of a statute it administers.

"There is no small measure of controversy surrounding [*Chevron*]," Segal said, because it

allows regulators "a roving mandate to do good" and to "fill in the gaps" of a statute.

"I think someone who espouses the notion of being a humble regulator would be loath to think that any regulatory agency has a roving mandate," Segal said.

But Scott Hempling, a law professor at Georgetown University and longtime adviser to regulators, says Danly's view ignores the intent of Congress when it wrote the laws governing FERC.

"Like most economic regulatory statutes, the Federal Power Act uses language both simple and broad. Rates, terms and conditions must be just and reasonable, and not unduly preferential. Those words compel FERC to induce utilities to perform cost-effectively. Congress has delegated to FERC the job of producing that performance," Hempling said in an email.

"To suggest that FERC may do nothing not explicitly stated is to misunderstand Congress' intent. Congress chose not to describe every specific tool the Commission may use, because no Congress would have the expertise or foresight to know what those tools are," Hempling said. "To think otherwise is to misunderstand the very purpose of a regulatory statute. Regulatory statutes delegate the choice of policy tools to an expert agency."

Nomination this summer?

Some call the FERC general counsel the "sixth commissioner."

Danly has made no secret of his desire to be one of the official five by filling the empty seat at FERC, according to several sources in and outside of FERC. And he has the support of Chatterjee as well as a number of Washington attorneys close to the Trump White House, sources said.

His nomination and confirmation would give Chatterjee what he has been seeking — a reliable third Republican vote who could help push through natural gas pipeline projects that have been stalled because of a 2-2 partisan split on the commission.

It would also solidify Chatterjee's role as chairman, a role that was threatened by the thwarted nomination several months ago of former NRG Energy Inc. executive David Hill to replace Chatterjee as chairman.

Chatterjee led an effort to have the White house pull back on its intended nomination of Hill, according to multiple sources. Chatterjee has denied those accusations (***Greenwire***, April 12).

Danly would be only the second FERC staffer to serve on the commission.

In comparison, Norman Bay, the former head of FERC's enforcement office, was selected by President Obama to be chairman in 2014.

Before joining FERC's enforcement office, Bay had spent more than a decade as a federal prosecutor in Washington, D.C., and New Mexico.

But sources stressed that a nomination is months away.

"If you think there's a chance of Danly getting on the commission by early this fall, I would easily take whatever odds you want to give me with a Nov. 1 over/under date," said one veteran regulatory affairs official with a major utility.

Twitter: @RodKuckro Email: rkuckro@eenews.net

The Energy Daily
June 10, 2019

FERC general counsel being eyed for commission?

Industry sources say the Trump administration is eyeing Federal Energy Regulatory Commission General Counsel James Danly as a potential nominee to fill an open GOP slot on the commission, making the former Skadden Arps attorney the latest rumored candidate in an extended process to fill a slot that opened with the January death of former Chairman Kevin McIntyre.

“He is the lead candidate,” one source said of Danly Friday.

Confirmation to FERC would mark a rocket-fast career path for Danly, who was named FERC general counsel by Chairman Neil Chatterjee in September of 2017.

At that time, he had been a lawyer with the energy regulation and litigation group at Skadden, Arps, Slate, Meagher and Flom LLP for only three years. He graduated from law school in 2013 and then was a law clerk to Judge Danny Boggs at the U.S. Court of Appeals for the 6th Circuit and a managing director of the Institute for the Study of War, a military think tank in Washington, D.C. Danly also is a former U.S. Army officer who served in Iraq.

Sources say Danly is well-liked by Trump administration officials for his war service and in recognition of his work in the Trump campaign and transition.

One source also said the Trump administration is leaning against pairing Danly—or whomever is picked for the GOP slot—with a Democrat to fill the seat of Commissioner Cheryl LaFleur, whose term expires on July 1.

Pairing nominees of two parties has become a common practice on Capitol Hill to fill controversial positions, giving lawmakers from both sides of the aisle a reason to support the package.

At the moment, any nomination to FERC is sensitive, with the commission handling several high-profile issues, including pressure from green groups and Democrats to more fully assess climate change impacts of natural gas projects before licensing them. FERC is also engaged in controversial proceedings on grid “resilience” and state-subsidized generation.

Return to Top

The Wall Street Journal
June 8, 2019

PG&E Can Pull Out of Green-Power Contracts

Court ruling allows California utility to shed billions in wind and solar deals, threatening scores of electricity suppliers

By Peg Brickley and Katherine Blunt

PG&E Corp. scored a legal victory over federal regulators that could clear the way for the financially troubled utility to rip up billions of dollars in expensive green-power contracts as it seeks to exit bankruptcy.

The ruling by Judge Dennis Montali, who is presiding over PG&E’s chapter 11 proceeding, may allow the company to get out of $42 billion in power-purchase agreements, including many pioneering wind and solar deals that are now well above current market prices.

That could threaten scores of electricity suppliers including units ofNextEra Energy Inc., Consolidated Edison Inc. and Berkshire Hathaway Inc., as well as complicate

California's ambitious plans to reduce carbon emissions to combat climate change. California Gov. Gavin Newsom has urged PG&E not to shed its clean-power contracts despite its financial difficulties.

PG&E said it was pleased with Friday's ruling, but appreciates concern that its bankruptcy will slow progress toward promoting clean energy. The company said it has yet to decide which contracts it will keep and which it will reject.

Bankruptcy gives PG&E the freedom to get out of power deals that it considers unfavorable, as long as a judge agrees. But the Federal Energy Regulatory Commission, which regulates interstate power markets, has asserted it also has authority over PG&E's contract decisions.

In his ruling late Friday, Judge Montali disagreed, finding that FERC overstepped its authority in threatening to overrule his decisions on PG&E's power-purchase agreements. FERC had sought to have the bankruptcy judge agree to side-by-side jurisdiction, which would have made it tougher for PG&E to get out of deals.

PG&E has $34.5 billion worth of renewable-energy contracts for electricity deliveries between now and 2043, according to a filing with FERC. Rejecting those with above-market prices could save the company $1.4 billion annually, according to Moody's Investors Service.

Daniel Sinaiko, a project finance attorney with Akin Gump Strauss Hauer & Feld LLP, said that if PG&E moves to reject some of its contracts, those power suppliers would join the line of creditors in the bankruptcy proceeding. But he added that such a scenario could have a chilling effect on the market for wind and solar projects in California if those companies were forced to take substantial losses. "It would definitely be disruptive if there started to be concern about whether the generators would make it out in one piece," he said.

NextEra, which had pushed FERC to intervene in the case, declined to comment on the decision. An appeal is likely and Judge Montali has said he would sign orders allowing speedy review of his decision by a higher court.

While PG&E could gain added financial flexibility by reworking contracts in bankruptcy, that would threaten the business of alternative-energy producers. Some of the companies rely on PG&E for the bulk of their revenue, including Topaz Solar, owned by Berkshire Hathaway.

Clearway Energy Group, which has a substantial renewable-energy portfolio in California, reduced its quarterly dividend in February in response to its exposure to PG&E's bankruptcy. The company, which reported a $47 million loss in the first quarter, has six solar projects and one natural-gas plant that sell electricity to PG&E. Those contracts accounted for about 23% of Clearway's revenue last year, according to securities filings. Clearway declined to comment on the ruling.

Even before the ruling, uncertainty about the future of their contracts with PG&E saw some green-energy producers' debt downgraded to speculative grade by Standard & Poor's. FERC's authority to hold the line on contracts in a troubled industry is a major issue for companies that are weighing restructuring alternatives.

Write to Peg Brickley at peg.brickley@wsj.com and Katherine Blunt at Katherine.Blunt@wsj.com

Return to Top

Electric

S&P Global Platts
June 7, 2019

LS Power complaint seeks 'clear path' for smaller transmission projects in MISO

By Jasmin Melvin

Asserting that Midcontinent Independent System Operator has left unresolved for years a flaw that limits smaller projects' role in the transmission planning process, LS Transmission and its affiliates Wednesday turned to the Federal Energy Regulatory Commission , filing a formal complaint to compel MISO to act.

Network upgrades that provide market efficiency benefits, have a voltage level above 345 kV and cost more than $5 million qualify for selection in the MISO Transmission Expansion Plan. These so-called market efficiency projects are eligible for regional cost allocation.

But smaller economic projects that do not meet the voltage or cost criteria are lumped into a category of other projects whose costs may only be assigned to the transmission owner zone where a project is located regardless of other beneficiaries.

Unnecessary costs

These projects can relieve system congestion, benefitting multiple transmission pricing zones, but they "may not be identified and evaluated by MISObecause there are not clear criteria and procedures for identifying them and determining whether they should be selected in the plan," LSP Transmission , Cardinal Point Electric and LS Power Midcontinent, collectively referring to themselves as LS Power, said in their complaint (EL19-79). "Even when identified, these projects may stall because under the current tariff project costs may not be allocated to all the beneficiaries."

Without a mechanism to plan for regionally beneficial economic enhancements that fall outside of the market efficiency project category, LS Power argued that MISO 's transmission planning process was creating "unnecessary congestion costs and unjust and unreasonable rates."

LS Power contends the issue could be resolved by lowering the voltage threshold for market efficiency projects to 100 kV.

"Currently the only reason to exclude projects with voltages below 345 kV from the market efficiency project category is that the cost allocation methodology for market efficiency projects allocates 20% of the costs of the project to the entire region," LS Power said. "The commission, however, can require MISO to propose a separate cost allocation method for regionally beneficial economic projects below 345 kV."

It stipulated that the new cost allocation method "must reflect the fact that multiple transmission pricing zones can benefit from the project."

Section 205 filing

While MISO has acknowledged the shortcomings in its transmission planning process and engaged stakeholders over several years, it has yet to develop an adequate solution, LS Power said, prompting its complaint filing.

It added that a Federal Power Act Section 205 filing (ER19-1124, ER19-1125) MISO sent the commission in February to address the issue does not go far enough.

That filing would lower the voltage threshold for market efficiency projects to 230 kV and create a new category of projects between 100 kV and 230 kV whose costs would still be allocated only to a single zone.

LS Power filed a protest in that proceeding calling for the voltage threshold to be lowered to 100 kV and a regional cost allocation method that would identify project beneficiaries using new three metrics.

Because some parties argued in that proceeding that directing such a change was beyond FERC ’s authority in response to a Section 205 filing, LS Power said its FPA Section 206 complaint ensures “that the commission can fully address the deficiencies in MISO ’s existing market efficiency project planning process and that the concerns of LS Power and others on the deficiencies of the Section 205 filing are not disregarded for want of proper procedures.”

FERC set a June 25 deadline for comments, protests and motions to intervene in the complaint proceeding.

Return to Top

ClimateWire
June 10, 2019
ENERGY TRANSITIONS

How much credit can Beyond Coal claim for plant closures?

Benjamin Storrow, E&E News reporter

In 2011, when the Sierra Club and then-New York City Mayor Michael Bloomberg launched the Beyond Coal campaign, coal accounted for 42% of America's power generation. Today, that figure is closer to 25%.

Now, the pair is aiming to finish the job. On Friday, Bloomberg announced he will spend $500 million to retire America's remaining coal plants by 2030, halt construction of new natural gas plants and elect climate champions to public office as part of a new Beyond Carbon initiative. A press release touted it as the largest philanthropic climate donation ever.

"Our goal is to move the U.S. toward a 100% clean energy economy as expeditiously as possible, and begin that process right now," Bloomberg told graduates at the Massachusetts Institute of Technology, where he announced the initiative as part of a commencement address. "We intend to succeed not by sacrificing things we need, but by investing in things we want: more good jobs, cleaner air and water, cheaper power, more transportation options, and less congested roads."

Beyond Coal, operated as an arm of the Sierra Club, is fond of touting the number of plants retired since 2011: Some 289 of the 530 units in operation at that time are now closed. The campaign can claim some credit for the trend, but how much is difficult to quantify.

The Sierra Club dispatched advocates to legislatures and city halls across the country, making the case for closing coal plants and replacing them with renewables like wind and solar. Just as important: The group sent lawyers to public utility commissions where decisions about

power plants' futures are decided but where environmentalists are traditionally less of a presence.

"For many decades, the only entities that were showing up in those venues were the utilities, consumer advocates and the big industrial customers," said Mary Anne Hitt, who leads Beyond Coal. "There wasn't a voice in those proceedings for the cutting edge of clean energy; there wasn't a voice for dealing with the cost of coal ash or a changing climate. We got people involved, translated wonky language. We educated people on this is where important decisions about your energy future are made. It's not in Washington, but in your state capital or maybe your city."

The advocacy has coincided with a technological and economic shift in America's power sector. Horizontal drilling and hydraulic fracturing unlocked a torrent of cheap natural gas, pushing many coal plants into retirement. At the same time, technological advancements in wind and solar have seen the price of renewables plummet.

Hans Daniels, the CEO at Doyle Trading Consultants, argued that the group's efforts would not have been as successful without fracking, which turned gas into a viable alternative to coal.

"They have certainly had an impact, but I think their impact has paled compared to cold, hard economics," Daniels said. "Natural gas is truly the fuel that has put the dagger into the heart of coal."

Gas and federal regulations like the Mercury and Air Toxics Standards played a large role in coal plant retirements across the country, said Leah Stokes, a professor who studies climate policy at the University of California, Santa Barbara. But she argued that environmentalists have played a critical role in states where utility regulators were inclined to favor existing coal plants.

She pointed to Ohio. In 2015, utility regulators there agreed to allow FirstEnergy Corp. to buy power from a subsidiary, which operated the company's struggling coal and nuclear plants. That plan was blocked by the Federal Energy Regulatory Commission. Ohio regulators then approved a scaled-back proposal to help the utility with grid modernization. Environmental groups like the Sierra Club have cast the measure as a backdoor subsidy and mounted a legal challenge at the Ohio Supreme Court (Energywire, Jan. 10).

"I think economic factors can't actually move all states' utility mix," Stokes said. "It requires advocates to show up to PUC proceedings and do battle with utility executives who'd like to make profits off their existing fossil fuel infrastructure."

If gas has played a role in the retirement of U.S. coal plants, it is now firmly in climate activists' crosshairs. Bloomberg's new initiative will aim to halt construction of new natural gas-fired facilities.

Paul Patterson, a utilities analyst at Glenrock Associates, said environmentalists make formidable opponents, especially when it comes to permitting new facilities. But he said greens owe much to cheap gas for the current retirement of coal plants.

Economics are likely to similarly decide the fate of Beyond Carbon's natural gas initiative, he said.

"The economics have been really favorable for renewables," Patterson said. "In the end, the technology has been one of the surprising sort of important things that led to this issue going forward."

Twitter: @bstorrow Email: bstorrow@eenews.net

Cleantechnica.com
June 9, 2019

The Time Is Ripe For Aggregation Of Behind-The-Meter Assets

by Karel Beckman

Originally published in EEnergy Informer.
By Fereidoon Sioshansi

While there may be many disagreements about the future transformation of the electricity sector, there is universal agreement that most future networks will have increasing amounts of variable renewable generation. And as the percentage of renewables rises above some threshold, say above 50%, the grid operator will be challenged to manage stability and reliability on the network.

In the case of California, it is the well known California Duck Curve issue – referring to the rapid rise of solar generation when the sun rises in the morning and the equally rapid drop of solar generation at sunset. In this case, the grid operator must quickly ramp down all dispatchable thermal generation to make room for solar output in the morning, while reversing the process in the evening once the sun sets.

In other countries, notably Denmark and Germany, variable wind tends to play havoc as wind generation rises and falls and cannot always be accurately predicted.

Historically, grid operators maintained a sufficient number of flexible resources, mostly gas-fired peakers, to fill in the voids in the variable renewable generation. These resources are expensive to maintain, are polluting when utilized, and cannot perfectly make up for the fluctuations in variable generation. Batteries do a much better job of this but are not currently available in large scale on most networks.

This has created an opportunity for new players who can offer fast response to signals from the grid operator to ramp up or down flexible demand. It is nothing new, the essence of demand response (DR) or price-responsive demand – it goes by different names in different places.

But while the basics are well known and have been tried in many parts of the world, DR has not reached the state of maturity to contribute significantly to stabilize the grid or to substitute for polluting peaking generation. This, however, may be changing for several reasons:

First, grid operators increasingly need more flexible generation and/or flexible demand as the percentage of renewables on their networks continues to rise.

Second, the technology to monitor and manage customer demand continues to improve and the cost of doing this continues to fall.

Third, regulators in more countries are beginning to realize that to maintain the reliability of future networks, new incentives are needed to enable flexible demand, distributed storage, and electric vehicles to more proactively participate in the market.

Voltalis is among the newcomers to fill this void. The Paris-based company, founded in 2006, aggregates and manages behind-the-meter customer assets. It monitors electrical appliances in homes and offices and delivers reliable, dependable, low-cost demand response (DR) services

to the grid operator and/or to the wholesale market, as well as in the specific capacity mechanism. The company has attracted roughly 100,000 customers amounting to 300 MW of inexpensive capacity aggregated from roughly a million electrical appliances mainly in homes, but also in commercial premises, offices and various public and municipal buildings.

Describing the company's business model, its founder, Pierre Bivas, says participating consumers essentially get free monitoring services and save energy, which reduces their monthly energy bill by up to 15%.

Voltalis installs the monitoring devices and manages them free of charge. Customers share the flexibility of their consumption – which Voltalis aggregates and operates at scale without inconveniencing them. It sells these services to the grid operator and/or in the wholesale market, which provides a revenue stream. It is a win-win-win with benefits for all three.

Initially, the French network operator, Réseau de Transport d'Électricité (RTE), agreed to test the scheme's proof of concept in a trial. After a successful pilot project, where Voltalis demonstrated that it could effectively and reliably deliver capacity on demand, it gained confidence in the business model and the underlying technology. Voltalis' distributed demand response accounted for more than 80% of the DR volume in the French market last year.

Moreover, Bivas explains that the scheme does not disadvantage non-participating customers, since Voltalis' intervention reduces electricity costs for everyone. Offering DR is far less expensive than paying generators to provide peaking capacity or flexibility services to the grid — there is less need for polluting generation and/or for grid reinforcements.

So what's the catch? As it turns out, the generators, especially those with expensive and inefficient peaking plants, end up losing revenues since their services will not be needed as often or won't get paid as much as they used to before DR services became practical and affordable.

Despite occasional skirmishes with the generators who stand to lose as aggregated DR business models proliferate, Bivas is optimistic that his company and others offering similar services will eventually prevail. After all, they offer a superior service at lower cost. What is there not to like?

According to Bivas, after years of opposition from the traditional generators, the French Parliament ruled in favor of the scheme followed, more recently, by supportive directives from the European Commission, which is eager to support the rapid growth of renewables.

Now regulators across Europe are receptive to similar business models. Likewise, since 2008 the Federal Energy Regulatory Commission (FERC) has moved in the same direction in the US, forcing organized market operators to acknowledge the growing role of DR and – more recently – storage by allowing them to actively participate in the ancillary services as well as in wholesale markets.

FERC says demand-side resources should be allowed to participate in markets as an alternative to traditional forms of generation – on their merits and without undue discrimination – based on their net benefits to all consumers.

DR and storage, both newcomers to the electricity business, are slowly finding useful niches in which to operate and developing viable revenue streams. With supportive regulations, far more can be expected in the years to come.

Return to Top

Gas/LNG/Oil Pipelines

Lehighvalleylive.com
June 9, 2019

Pipeline update: Where these 2 projects through the Lehigh Valley stand, amid continuing Pa. natural gas boom

Pennsylvania's natural gas production in 2018 was nearly four times greater than that of 2011, when hydraulic fracturing operations began to ramp up in the state's Marcellus Shale region.

To help get that gas to homes, schools, businesses and industries, two pipeline projects are continuing their march toward construction through the Lehigh Valley.

PennEast Pipeline is a roughly $1.2 billion new pipeline from the Pennsylvania's Marcellus Shale region in Luzerne County to Mercer County in New Jersey. Its constituent companies say the new line, reviled by environmentalists, is vital to safely and affordably meeting the region's natural gas and electricity needs.

Adelphia Gateway is an estimated $339 million retrofit of an existing line originally built in the 1970s to transport oil from Marcus Hook outside Philadelphia for electricity generation at Martins Creek in Lower Mount Bethel Township. The line will transport both Marcellus and Utica shale gas to the Philadelphia region.

Natural gas boom
The Utica geologic formation lies beneath portions of eight states, including Pennsylvania, from Tennessee through New York and into Canada. The Marcellus formation is more central to Pennsylvania's natural gas boom, extending under 60% of the state, along with parts of West Virginia, New York, Ohio and Maryland, according to the U.S. Energy Information Administration; it has the largest estimated proved reserves of any natural gas field in the United States.

Shale fracking -- injecting water, sand and chemicals at high pressure deep underground -- has made Pennsylvania second only to Texas in gross withdrawals of natural gas. Production in 2018 yielded 6.2 trillion cubic feet of natural gas in Pennsylvania, or 16.8% of the United States' entire yield. Texas produced 8.8 trillion cubic feet, or 23.8% of the national total of 37 trillion cubic feet, the EIA says.

Natural gas, in turn, has helped make Pennsylvania the nation's biggest exporter of electricity, sending an annual average of 58 million megawatthours from 2013 to 2017 to other states, EIA statistics show.

In February 2019, natural gas-fired electricity accounted for 40% of Pennsylvania's net electricity generation, followed by 26.4% from nuclear, according to EIA data. In 2017, nuclear power supplied 42% of the state's net electricity generation, more than from any other

energy source, the EIA says.

According to PJM Interconnection, which manages the power grid for 13 states in the Mid-Atlantic region, coal and nuclear resources generated 91% of the electricity on the PJM system in 2005, and gas just 6%. Today, it's about 31 natural gas, 29 coal and 35 percent nuclear. In 2018, natural gas-fired energy exceeded coal-fired energy for the first time across the grid.

More Pennsylvania households (around 51%) use natural gas as their primary home heating fuel than any other source, with 22% relying on electricity, 17% using fuel oil, 4% burning propane and nearly 3% burning wood, the EIA says.

Natural gas exports
PennEast, which is a consortium of five energy companies, and Adelphia Gateway, a project of New Jersey Resources Corp., are far from the only companies looking to cash in on Pennsylvania's natural gas boom.

The Tulsa, Oklahoma-based Williams Companies said Thursday it will reapply for key environmental permits, rejected Wednesday by New Jersey regulators, to to build a hotly contested $926 million pipeline that would carry natural gas from Pennsylvania through New Jersey, and under Raritan Bay and the Atlantic Ocean to New York.

The New York City skyline is seen June 3, 2019, from Middletown, New Jersey, across Raritan Bay, where a natural gas pipeline is proposed from Pennsylvania to serve New York City and Long Island.
AP Photo/Wayne Parry

The New York City skyline is seen June 3, 2019, from Middletown, New Jersey, across Raritan Bay, where a natural gas pipeline is proposed from Pennsylvania to serve New York City and Long Island.

On March 1, 2018, the Dominion Energy Cove Point liquefied natural gas facility exported its first LNG cargo. Cove Point is the only LNG export facility on the East Coast of the United States, and the second export facility operating in the Lower 48 states after Sabine Pass in Louisiana, which began commercial operations in 2016, according to the EIA.

Environmental groups like the Delaware Riverkeeper Network and New Jersey Sierra Club say another LNG port is part of Delaware River Partners' Gibbstown Logistics Center multi-use deep-water seaport and international logistics center under development along the river in South Jersey's Gloucester County. Those environmental groups argue the LNG component of the project has been withheld from the public, and urged the Delaware River Basin Commission to cancel a hearing on the center slated for last Thursday in West Trenton. The DRBC told njspotlight.com the LNG component was not included in its permit application. A spokeswoman for Delaware River Partners told the website the company is in talks with potential customers on "a variety of energy-related liquids, potentially including liquefied natural gas."

"Freedom gas" is how a U.S. Department of Energy official referred to liquefied natural gas in a news release last month about an expansion of the Freeport LNG Terminal on Quintana

Island, Texas.

Both PennEast Pipeline and Adelphia Gateway maintain their projects are for domestic energy use, not export.

“It absolutely is going to be for domestic use,” PennEast spokeswoman Patricia Kornick told lehighvalleylive.com last week. “That remains, that’s always been the goal of the Penneast Pipeline. There are enough businesses and homes in the region that can benefit from reduced cost natural gas.”

Katelyn McNally, a spokeswoman for Adelphia Gateway, said: "Adelphia Gateway has no plans to ship natural gas offshore. The natural gas transported in the pipeline will be used by customers in the Greater Philadelphia area and the surrounding region."

PennEast project update
The status of the PennEast project is that it's been approved by the Federal Energy Regulatory Commission, which by a vote of 3-2 last August rejected requests for a rehearing on its certificate of public convenience and necessity awarded Jan. 19, 2018, by FERC.

PennEast is continuing to conduct environmental surveys, expected to wrap up in the next few months, as part its resubmission for project approval from the New Jersey Department of Environmental Protection. A ruling in federal court last December allowed those surveys to move ahead where landowners refused to grant PennEast permission to do so. PennEast calls the surveys an important component of efforts to minimize project impacts. In addition, the consortium is working with landowners on fair compensation for easements across their properties.

"To date, approximately 72 percent of landowners along the route have reached easement agreements with PennEast," said Kornick, the project spokeswoman. "As it works with the remaining landowners to reach easement agreements that compensate landowners fairly and fully, PennEast continues to make very good progress on the surveys in New Jersey."

Opponents of PennEast in March hailed a separate ruling in federal court that granted the State of New Jersey's motion for a stay on the project.

“This is really good news,” New Jersey Sierra Club Director Jeff Tittel said in a statement at the time. "The Court of Appeals will delay the PennEast pipeline until court case is decided. Any time you stop a bad project it is a win. The pipeline could be delayed for a year or even two to three years.

"When it comes to pipeline or other natural gas projects, the more we can delay, the better the chance it could be stopped. Market conditions can change, and permits can be denied."

PennEast, however, maintains it plans to begin construction around the end of 2019, or possibly early 2020.

"When setting anticipated timelines, PennEast considers multiple variables, including permits, court rulings and weather," Kornick said.

First announced in August 2014, the roughly 120-mile, 36-inch-diameter underground line would originate in Dallas, Pennsylvania, and end at Transco's pipeline interconnection near Pennington, New Jersey. A single compressor station is proposed to be built, in Kidder Township, Carbon County.

Citing a report from Concentric Energy Advisors, PennEast last month said that had the pipeline already been in service, it could have saved families and businesses in eastern Pennsylvania and New Jersey $435 million in energy costs last winter, and more than $1.3 billion combined over the past two winters.

Opponents of the line, which would cross through Northampton and Hunterdon counties, say construction threatens 91 acres of wetlands, over 44 miles of forest, 88 waterways and, all told, more than 1,600 acres.

The route has continued to evolve, proof -- PennEast says -- that the consortium is working with stakeholders on the project. Most recently, PennEast agreed last month to move the pipeline by about 100 feet away from a neighborhood in Bethlehem Township, Pennsylvania, WFMZ-TV 69 reported.

Where Adelphia Gateway stands

Adelphia Gateway remains under review for FERC approval, which could come at any time, said Tamara Young-Allen, spokeswoman for the federal commission: "The commission may act at any time and does not announce in advance the date of issuance for its decisions."

FERC issued its environmental assessment on the project Jan. 14, and extended the comment period originally set to expire Feb. 8 through March 1, due to the partial government shutdown of 2018-19. That assessment found "the design poses no significant environmental impact and is the preferred path forward," according to Adelphia Gateway.

The project also has air quality permits in hand from the Pennsylvania Department of Environmental Protection, but still needs its state water quality assessment.

Adelphia Gateway would convert 50 miles of an existing 84-mile pipeline from oil to natural gas, with the 18-inch polycoated seamless steel traversing portions of Northampton, Bucks, Montgomery, Chester and Delaware counties.

The northern 34 miles of the pipeline, from western Bucks County to the Martins Creek Terminal in Northampton County, have already delivered natural gas since 1996. The project also involves the construction of two compressor station facilities, in West Rockhill Township, Bucks County, and Lower Chichester Township, Delaware County, as well as about 4.7 miles of new laterals in Delaware County and New Castle County, Delaware.

"We are eager to begin the construction phase of the project -- which will be minimal due to the repurposing of existing infrastructure -- and still anticipate the main southern line being placed into service by the end of this year," said McNally, the Adelphia Gateway spokeswoman.

Here is a map of the Adelphia Gateway pipeline.

This map from Adelphia Gateway, a project of New Jersey Resources Corp., shows the route of an existing line that once transported oil, and which would be converted to carry natural gas.
Courtesy image

This map from Adelphia Gateway, a project of New Jersey Resources Corp., shows the route of an existing line that once transported oil, and which would be converted to carry natural gas.

Kurt Bresswein may be reached at kbresswein@lehighvalleylive.com. Follow him on Twitter @KurtBresswein and Facebook. Find lehighvalleylive.com on Facebook.

Return to Top

Mail Tribune
June 7, 2019

FERC on Jordan Cove comments: Take a number

by Vickie Aldous

The Federal Energy Regulatory Commission will hold comment sessions on a proposed natural gas pipeline through Southern Oregon, but people will have to take a number, get in line and then deliver their comments one-on-one with a staff member joined by a court reporter.

FERC is also warning that disruptive protests could bring a halt to the sessions.

In Jackson County, a session will be held from 1 to 8 p.m. Wednesday, June 26, at the Ramada Medford Hotel and Conference Center, 2250 Biddle Road, Medford.

Sessions are planned June 24 in Coos Bay, June 25 in Myrtle Creek and June 27 in Klamath Falls.

The Canadian-headquartered company Pembina hopes to build a 229-mile underground pipeline through Klamath, Jackson, Douglas and Coos counties to a proposed export terminal north of Coos Bay.

The Jordan Cove LNG proposal is under review by FERC, which previously denied the proposal, and the state of Oregon, which has said Pembina needs to provide more information to show the project won't cause erosion, increase landslides and harm waterways and fish.

In a notice issued this week, FERC said it's not required to hold the public comment sessions but is doing so to allow people to comment on a draft Environmental Impact Statement about the project that was released March 29.

"These comment sessions have been purposefully designed to efficiently and effectively allow for the greatest number of individuals to provide comments on the draft EIS," FERC said in the notice.

People who want to make statements will be issued numbers, then called to speak to a FERC

staff member with a court reporter.

To reduce potential wait times, four court reporters will be at each session to receive comments, FERC said.

People who want to skip the lines can submit electronic comments via FERC's website or mail in their comments.

FERC pointed out the sessions will last seven hours.

"Recognizing significant public interest for this project and in anticipation of a large turnout, FERC staff has chosen to allot more time for the public comment sessions than is typical," the notice said.

FERC expects most people to come between 5 and 7 p.m. and is urging people to come earlier if they can. There will be reduced staffing between 4 and 5 p.m. for a break, and the sessions will end at 8 p.m.

FERC may stop issuing numbers before 8 p.m. so the sessions end on time.

The federal agency also issued a set of rules about crowd conduct.

Loudspeakers, lighting, oversized visual aids, disruptive video or photographic equipment or other visual or audible disturbances are not permitted, according to FERC.

Conversations must be kept to a "reasonable volume," and recorded interviews are not allowed within the session space.

"FERC reserves the right (to) end the session if disruptions interfere with the opportunity for individuals to provide verbal comments or if there is a safety or security risk," FERC said in the notice.

FERC was criticized in 2017 for the one-on-one format of its public comment sessions on the project.

The Jackson County Board of Commissioners and project opponents also objected to FERC skipping over Jackson County and scheduling hearings in Coos, Douglas and Klamath counties.

Pembina says the one-on-one format is a good way to collect meaningful comments on the project.

"This approach puts the emphasis where it should be — on quality and substance of input from all individuals," said Tasha Cadotte, community and communications manager for Jordan Cove LNG. "It encourages broader participation by people with something to say rather than on public spectacle and dramatic displays by individuals or organizations that rely on conflict and attempted intimidation through crowd theatrics.

"Pembina, the Jordan Cove project and its many supporters are looking forward to continuing to engage with our neighbors in Coos, Douglas, Klamath and Jackson counties at the June FERC meetings that have now been scheduled," Cadotte said.

Project opponent Susan Brown, staff attorney at the Western Environmental Law Center, said the proposal has been rejected in the past at the federal level. She pointed out that the Oregon Department of Environmental Quality recently denied a Clean Water Act permit, saying Pembina hasn't submitted enough information to show the project isn't harmful.

"These upcoming hearings provide the public an opportunity to raise their concerns about Jordan Cove LNG and have their voices heard," Brown said.

Veronica Silva of Rogue Climate said opposition continues to grow across Southern Oregon.

“FERC needs to follow the lead of the state of Oregon and deny this permit for Jordan Cove LNG. What our communities need is a faster transition to clean energy, not new fracked gas export pipelines that threaten water, climate and local economies,” Silva said.

Pembina argues the project will supply Asia with cleaner-burning natural gas.

The company says on its website that construction of the pipeline and export terminal will create more than 6,000 good-paying construction jobs during peak construction and more than 200 permanent jobs.

The project would also generate $60 million in property tax revenue in the four affected counties, plus $50 million in tax revenue for the state, Pembina says.

Pembina has offered minimum payments of $30,000 to landowners along the pipeline route. The company previously announced it has reached voluntary agreements with a majority of landowners for use of their property.

Written comments can be mailed to Secretary Kimberly D. Bose, Federal Energy Regulatory Commission, 888 First St. NE, Room 1A, Washington, DC 20426. Reference the project docket numbers CP17-494-000 and CP17-495-00 with the submission.

Comments can be submitted electronically via https://ferconline.ferc.gov/QuickComment.aspx.

Reach Mail Tribune reporter Vickie Aldous at 541-776-4486 or valdous@rosebudmedia.com. Follow her on Twitter @VickieAldous.

Return to Top

News-Journal
June 8, 2019

East Texas natural gas could get boost from pipeline, terminal project

By Ken Hedler khedler@news-journal.com

His Houston company is close to a final decision on a $30 billion project to carry liquefied natural gas from fields in East Texas and West Texas to a terminal proposed in Lake Charles, Louisiana, John Howie said last month.

And after the Driftwood pipeline and terminal are operating in 2023, gas would be shipped to overseas markets such as China, said Howie, president of Tellurian Production Co.

“We are building a global natural gas company,” he said of the company founded in 2016 by Charif Souki and Martin Houston. “We are going to acquire and produce natural gas in East Texas and Louisiana.”

The project, which takes its name from a town in Hays County, envisions a 700-mile pipeline carrying LNG from the Permian Basin in West Texas and New Mexico and another of about 200 miles from the Haynesville Shale in East Texas and Northwest Louisiana.

Howie, who started his career in the energy field in 1982 as an engineer with Amoco in Longview, discussed the plans during the 10th annual East Texas Energy Symposium at Kilgore College.

He also used the podium at the Devall Student Center to call for investors to help finance a project that will cost an estimated $30 billion to $35 billion. He said the minimum investment is $500 million.

The project is moving through the regulatory process, as well.

In late April, Tellurian said its Lake Charles terminal was cleared by federal regulators, a major hurdle in the company's three-year quest to build the export facility.

The Federal Energy Regulatory Commission gave the green light to its Driftwood project and to build a 96-mile pipeline carrying natural gas from the major pipeline hubs at Gillis and Eunice northeast of the project to the proposed gas liquefaction and export facilities on the west bank of the Calcasieu River, south of Lake Charles.

Tellurian still has to receive a U.S. Army Corp of Engineers permit and a Department of Energy order for non-Free Trade Agreement exports.

The company has said its final investment decision will then depend on the result of negotiations with potential investors and partners, as well as the terms it can negotiate with banks on financing.

The Driftwood project, which is expected to support 6,400 construction jobs and 300 permanent jobs once complete, won a controversial tax concession last year worth as much as $2 billion over its first decade, the largest industrial tax break in Louisiana's history.

Tellurian has said it aims to raise $7 billion by selling stakes in its LNG throughput to partners, another $1 billion from private equity investors and $20 billion in project debt financing.

In Kilgore, Howie said the market for LNG is growing about 9.3 percent a year, fueled by population growth and industrial development.

The proposed terminal near Lake Charles would cover about 1,000 acres that could handle 27.6 million tons per year.

Tellurian already has a stake in the Haynesville, and aims to grow that.

In a presentation to investors in April, the company said it owns nearly 11,000 acres in the Haynesville formation, which gives it control over 1.4 trillion cubic feet of natural gas reserves. It aims to grow its Haynesville gas reserves to 15 trillion cubic feet.

William Ambrose, a research scientist at the Bureau of Economic Geology at UT Austin, talked about the oil and gas supply in Texas.

He said the state provides the bureau $4.5 million a year to do research to benefit the energy industry.

He displayed data from February showing Texas has 186,841 active oil wells and 101,084 active natural gas wells.

But Ambrose said the most recent study of East Texas took place about 10 years ago.

He described the East Texas oil field as being "mature" because oil was first drilled in the Longview and Kilgore area in 1930 and drilling now has to be more than 3,000 feet deep to find oil and gas.

Return to Top

The Houston Chronicle

June 7, 2019

The Great LNG Debate: A growing industry faces stiff, organized opposition in the Rio Grande Valley

Sergio Chapa

PORT ISABEL— Flora Gunderson's eyes filled with tears and her hands shook as she recalled the March 2005 day when she nearly lost her husband.

That's when a vapor cloud ignited at the BP Refinery in Texas City, sparking an explosion that killed 15 people and injured 180 others. Her husband, George, who worked there, only escaped after ducking between two trucks, where, by a stroke of luck, the force of the blast sent the door of a portable toilet above him, shielding him from shrapnel and burning debris.

Those memories have come flooding back to the Gundersons, who now live in a palm tree-lined retirement community along the coastal waters of the subtropical Rio Grande Valley. Just three miles down the Brownsville Ship Channel, three companies are proposing liquefied natural gas export terminals that the Gundersons and others fear would not only pose health and safety risks to nearby residents, but also change the character of the sunny seaside community, where pelicans dive for fish and fresh and salt air blows across porches.

"I don't want this place turned into Pasadena," said Gunderson, referring to the Houston area city dominated by refineries and chemical plants. "I don't want that for this area. I don't want to lose all this to their greed."

The Great LNG Debate

A trio liquefied natural gas companies from the Houston area are seeking permission from state and federal regulators to build three LNG export terminals at the Port of Brownsville. If approved, the three facilities represent a combined $38.75 billion of private investment, thousands of construction jobs and hundreds of permanent jobs. Combined, they will be capable of producing up to 35 million metric tons of LNG per year.

Texas LNG

Owner: Texas LNG

Headquarters: Houston

Planned LNG Capacity: 2 million metric tons per year

Project Location: North Shore of Brownsville Ship Channel

FERC Permit Application Date: March 9, 2015

Expected FERC Permit Decision Date: June 13, 2019

Annova LNG

Co-Owners: Exelon, Kiewit and Black & Veatch

Headquarters: Houston

Planned LNG Capacity: 6 million metric tons per year

Project Location: South Shore of Brownsville Ship Channel

FERC Permit Application Date: March 11, 2015

Expected FERC Permit Decision Date: July 18, 2019

Rio Grande LNG

Owner: NextDecade Corp.

Headquarters: Houston

Planned LNG Capacity: 27 million metric tons per year

Project Location: North Shore of Brownsville Ship Channel

FERC Permit Application Date: March 20, 2015

Expected FERC Permit Decision Date: July 25, 2019

The Gundersons and their neighbors are part of the fierce opposition to proposed LNG plants that are dividing residents of the impoverished border region along the familiar lines of growth versus quality of life, jobs versus the environment and change versus preservation. Those fault lines have taken a particularly sharp edge in this debate, with the nearly $40 billion that the LNG projects promise to invest juxtaposed against one of the poorest metropolitan areas in the country, where nearly one in three people live in poverty and the unemployment rate, 4.7 percent in April, is the highest in Texas.

On HoustonChronicle.com: Momentum accelerates for burgeoning LNG industry

Mario Lozoya, CEO of Greater Brownsville Incentives Corp., a workforce development agency, believes the projects could help lift both people and communities in the Rio Grande Valley out of poverty. Lozoya is developing training programs to give local workers the skills needed to get some of the estimated 7,000 construction jobs and then move into high-paying occupations once the LNG terminals are complete.

“These projects bring demand for a different kind of skilled worker that pays more than the typical welder or the typical electrician,” Lozoya said. “It’s an opportunity for us to create skilled workers there that can assume the jobs of tomorrow — real 21st century jobs.”

LNG debate

The projects are part of the LNG boom along the Gulf Coast, driven by the flood of natural gas from Texas shale plays and growing global demand for cleaner-burning fuels. The Port of Brownsville has become a hotspot for LNG developers largely because it holds some of the last available deepwater property along the Gulf Coast.

Three companies — Texas LNG and NextDecade LNG, both of Houston, and Annova LNG, a unit of the Chicago energy company Exelon — began filing for federal permits in March 2015. The Federal Energy Regulatory Commission is expected to issue a final decision on Texas LNG’s permit on June 13; final decisions for the other companies should come next month.

Even before the companies filed for permits, plans to build LNG export terminals among pristine white sand dunes and coastal wetlands sparked outrage among environmentalists, worried about irreversible damage natural resources and habitat; Native Americans, concerned about pipelines violating ancient burial grounds and sacred lands; and shrimpers and fishermen, anxious about hundreds of tankers that would crowd waterways. By May 2014, Rio Grande Valley opponents united under the group called Save RGV from LNG.

“People here care deeply about this coastline,” said Rebekah Hinojosa, a Brownsville organizer with the Sierra Club, a national environmental advocacy group. “We have a strong connection to it. People love their wild lands. There’s a long history of support for nature and

support for local businesses like fishing guides and shrimpers. There's a lot of heart in this fight."

Early opposition efforts centered around social media and email alerts to mobilize people to attend public meetings and file comments against the projects, which they did by the thousands. Opponents also persuaded Point Isabel Independent School District board members to reject tax breaks for Annova LNG and NextDecade's Rio Grande LNG project in 2015 and 2016 respectively.

Texas LNG did not seek tax breaks, but Hinojosa and others traveled to Paris in October 2017, where they helped convinced French bank BNP Paribas to sever its ties to the shale oil and gas industry and end its role as a financial adviser for the Brownsville project.

Much of the opposition to the plants has focused on the impact of the developments on three endangered species — two wildcats, the ocelot and jaguarundi, and the aplomado falcon. Environmental reviews by FERC officials gave the three LNG plants the green light as individual projects, but noted that their combined traffic, light, noise and habitat fragmentation would have "permanent and significant" impact on the ocelot and jaguarundi.

Environmental discrimination

Opponents say the LNG proposals follow a familiar pattern for energy projects, such as refineries and chemical plants. They would be located in some of poorest areas.

Residents of a nearby colonia called Laguna Heights formed a group named "Vecinos Para el Bienestar de la Comunidad Costera," or "Neighbors for the Well-Being of the Coastal Community" to fight the projects. Nearly half of the 3,500 people in the unincorporated community were born outside of the United States, more than 80 percent speak Spanish and nearly one-third of households live on less than $15,000 per year.

Located a few miles northwest of the plants, Laguna Heights residents worry the group fear that the sea breeze would carry pollutants such as carbon monoxide, sulfur dioxide, and volatile organic compounds into their community.

"Some of the members of the group moved here after spending parts of their childhood in industrial areas of Mexico where pollution is rampant and egregious," the group's attorney, Kathryn Youker, said. "They came here to escape that."

Most residents of Laguna Heights work in the hotels or restaurants of South Padre Island and Port Isabel. They not only worry about their children being exposed to pollution, but also how the plants might affect the local tourism industry, which according to a 2017 study generates $343 million in visitor spending and employs 3,500 people.

"If we have an ugly and nasty beach," said Terrie Nuñez, a real estate agent whose husband's family owns a local restaurant, "who's going to want to come here."

Shrimpers and fishermen have their own worries. Lela Burnell Korab, a third-generation shrimper whose family owns six boats, said many have joined a group called Shrimpers and Fisherman of the RGV to voice concerns about the impact on their harvests from increased ship traffic and waves created by massive tankers. If all three terminals win approval, more than 500 LNG tankers a year would stream through the Brownsville Ship Channel.

Another key concern is the U.S. Coast Guard would implement safe harbor provisions, requiring all other ships to remain docked while LNG tankers travel through the channel and keeping shrimpers and fishermen from their catch, putting more pressure on a local fishing and shrimping fleet that has shrunk to 100 boats from 450 in 1970.

“I would like to see more of a game plan in place before they get constructed,” Korab said.

Political support

The projects have the backing of Texas political leaders, including U.S. Senator John Cornyn, Lt. Gov. Dan Patrick and state Sen. Eddie Lucio Jr., D-Brownsville, who say the terminals would bring much needed investment and jobs to the area and benefit the broader Texas economy, bringing billions of dollars into the state and supporting jobs in oil and gas fields, petrochemical plants and office towers.

Global LNG demand is expected to double over the next two decades — to 800 metric tons in 2040 from from 400 million metrics tons in 2019 — as countries around the world seek cleaner burning fuels to address climate change and pollution, according to the consulting firm Accenture Strategy. Texas, producing record volumes of natural gas, is positioned to benefit from surging demand as LNG processing and export complexes are developed.

For example, revenues at the nation’s leading LNG exporter, Cheniere Energy of Houston, jumped 37 percent last year to $2.4 billion, fueling continued expansion of the company’s terminals in Louisiana and Corpus Christi and creating more jobs. Eduardo Campirano, chief executive of the Port of Brownsville, said if just one of the three proposed LNG terminals are built, it would prove transformative for a region, where high paying jobs are scarce and investment on that scale rare.

On HoustonChronicle.com: Gulf Coast is the new Middle East

“If all three projects successfully meet their requirements, we are looking at a combined investment of $38.75 billion plus more than 7,000 construction jobs for at least a decade,” Campirano said. “This will transform the economic landscape of the Rio Grande Valley by creating significant investment and job opportunities for our region.”

Texas LNG officials did not reply to a request for comment, but previously said the company stands behind its project and the permitting process. In a nod to environmentalists, the company plans to use electric motors to reduce noise and pollution.

Annova LNG reiterated plans to use electric motors and build a 25-foot tall concrete wall to reduce light and noise from the plant. Annova also moved its proposed site further east to create a 185-acre wildlife corridor.

NextDecade has pledged to plant butterfly and pollinator-friendly wildflowers along the 138-mile route of a proposed pipeline to move gas from the Agua Dulce hub near Corpus Christi.

Safe Neighbors

Steve Everley, a spokesman for industry-funded Texans for Natural Gas, called the proposed plants a “once in a generation opportunity” for the economy of the Rio Grande Valley and the state.

Citing LNG export terminals already in operation in Cameron Parish, La., Corpus Christi and in Cove Point, Md., as examples, Everley said the proposed Brownsville plants can safely coexist with neighbors.

“It’s not theoretical,” Everley said. “We already have data points that prove that LNG export terminals can coexist with the communities in which they operate.”

sergio.chapa@chron.com

twitter.com/sergiochapa

Return to Top

Axois.com
June 10, 2019
Amy Harder

Natural gas is helping combat climate change — but not enough

Natural gas is to climate change what our mediocre exercise and diet regimes are to our health: far from perfect but better than nothing.

Why it matters: Natural gas, which is becoming the world's dominant energy, emits half as much carbon dioxide as coal. That's why it's emerging as a good-enough-for-now solution to climate change. But since it's a fossil fuel, it still produces heat-trapping emissions.

The big picture: Natural gas was the fastest-growing energy source last year —accounting for 45% of all such growth — with most regions and many industries turning to the fuel as a cleaner alternative to coal and oil, according to an International Energy Agency report released Friday. It's set to keep growing in the coming years.

The intrigue: Environmentalists and some politicians are increasingly opposed to natural gas because they worry it's locking in far too much global warming. Looking purely at the math and science of climate change, they're right.

Ramping up natural gas would make it impossible to cut emissions to a level scientists say would avert the worst impacts of a warmer world. That assumes there won't be a massive buildout of emissions-capturing technology, which is still in its infancy and expensive.

But, but, but: Science and math don't operate in a vacuum. And the reality is, natural gas is providing a cheap, plentiful, cleaner-burning option for countries to get off the world's dirtiest — and historically dominant — power source: coal.

Natural gas emits very little particulate pollution, which is a big draw for developing nations whose populations are choking on smog from coal and oil.

To think countries wouldn't make this transition because of what the science says reflects a lack of appreciation for how the real world embraces science: imperfectly and unevenly.

Let's go back to that personal analogy I opened with:

Doctors say we should eat several servings of vegetables daily and exercise at least 30 minutes a day. Yet most of us fail to live up to those recommendations for numerous reasons: We're unmotivated, busy, can't afford healthy food, really like unhealthy foods, etc.

While we don't do perfectly what the doctor recommends, most of us also at least try to fit in exercise and opt for the salad over the fries because we want to prevent health conditions today and as we age.

Similarly, it'd be ideal if we could immediately begin rapidly transitioning to using only zero-emitting energy resources to avert the worst impacts of a warmer world today and into the future because that's what the science recommends.

But we're not doing that for a whole host of reasons, including: Natural gas is plentifully available, often times the cheapest electricity option and a source for things not easily created with renewables (like chemicals). Political influence and jobs from these industries are other big factors.

To be clear, variable wind and solar costs are plummeting, and they're booming alongside

natural gas around the world. In some places they're even cheaper.

But zero-emitting options like batteries to back them up when needed aren't similarly cheap yet. Natural gas offers cleaner-burning backup compared to coal.

Where it stands: Natural gas has been and is projected to be a big driver of emission reductions around the world, even accounting for uncertainty around methane emissions, per the IEA. Methane is the primary component of gas, but also a greenhouse gas whose impact on warming the planet is far greater on a shorter time frame than CO2.

In developed countries, like the United States and the United Kingdom, natural gas displacing coal is a big reason emissions in these countries have dropped. Other drivers include renewable energy, stagnant power demand and energy efficiency.

In some rapidly growing regions of the world like Southeast Asia, electricity demand is so great that nearly all energy sources, but especially natural gas and renewables, are likely to be needed for decades.

Europe is increasingly importing American liquefied natural gas, even as the fuel's long-term future there is limited by competition from renewables, per the IEA report.

"Gas of course has a much lower carbon content than any other fossil fuel. Therefore, we think gas is very important as an intermediate balancing fuel," Maroš Šefcovic, European Commission vice president, said in an interview in May.

Longer term, he said, natural-gas infrastructure should eventually be repurposed for zero-emitting sources, such as hydrogen from renewable energy.

What we're watching: Whether technology and policy will develop in a way that helps or hinders natural gas. For the next decade or two, the fuel is poised to be the dominant energy source — even with moderate prices on carbon dioxide emissions, because that actually hastens the shift away from coal to gas.

The bottom line: Whether gas remains king depends on how aggressively world leaders act on climate change.

Return to Top

Hydro

St. George News
June 7, 2019

After lengthy permit process, Lake Powell Pipeline ready for next step

Written by Mori Kessler

Alstrom Point, Lake Powell, Utah, date unspecified | Image by igormattio from Pixabay, St. George News

ST. GEORGE — Championed by state and local water planners and decried by conservation groups, the Lake Powell Pipeline project continues to be a focal point for discussion among Southern Utah residents.

As to the current status of the pipeline project, a public comment period connected to a permitting process overseen by the Federal Energy Regulatory Commission – more commonly

known as FERC – recently concluded. That permitting process is moving on to an environmental study phase, said Ron Thompson, general manager of the Washington County Water Conservancy District.

Federal regulators

“Hopefully earlier than later, (federal regulators) will come out with a draft environmental impact statement,” Thompson told St. George News, adding that a potential draft statement could be released this fall.

“There will then be a chance for some comments, and sometime in 2020 there will be a final environmental impact statement, and it just depends how long it takes the agency to write up what they call a final record of decision,” he said. “We’re hoping it’s in late 2020 or early 2021.”

In late 2017, a question over which agencies had jurisdiction over facets of the pipeline project was raised by FERC. The agency announced it approved a permit for an environmental study to be done regarding the six proposed hydroelectric turbine facilities that would be a part of the pipeline, yet officials did not feel it had jurisdiction over other components of the project beyond that.

While the water district and Utah Division of Water Resources asked FERC to reconsider, the issue has since been resolved, with other federal agencies being brought in and consulted as it moves forward.

FERC nonetheless remains in charge of the project’s environmental impact study.

“We’re glad to have a ruling so we know who all the players are,” Thompson said in September 2018 when FERC clarified the jurisdiction issue. “This settles who does what and allows the environmental (study) process to move forward.”

Growth

The primary source of water in Washington County is currently the Virgin River basin. While it is believed that water from this source is enough to sustain the county at its current estimated population of 171,000, it won’t be enough to sustain the 500,000 projected for the county by 2065.

The Lake Powell Pipeline project is seen as a necessary addition to the county to help accommodate the anticipated growth, as well as supply a much-needed secondary source of water for the county, according to the Washington County Water Conservancy District.

In addition to the county’s permanent residents, there are also seasonal residents and overnight visitors. According to a recent study from the University of Utah’s Kem C. Gardner Center, the county’s peak temporary resident population is estimated at over 222,000.

“Twenty percent of our population comes in the winter, and we have six million tourists – all of those use water,” Thompson said. “This community is also fairly unique because it really is a regional hub. We have people who come from miles and miles away for shopping, for medical services, entertainment. So you have a lot of draw here.”

Washington County has also been blessed with an incredibly robust economy that a reliable supply of water helps sustain, Thompson added.

Counting water

Opponents of the Lake Powell Pipeline often refer to Washington County as one of the county’s worst water wasters.

Conservation groups such as Conserve Southwest Utah and the Utah Rivers Council claim that per capita water consumption in Washington County is as high as 325 gallons per day. This is considered a large amount when compared to other cities in the Southwest like Albuquerque, which consumes 127 gallons per capita daily.

County water officials have long disputed residents actually use that much water.

According to 2015 numbers released by the Utah Division of Water Resources, the actual number is closer to 143 gallons per capita per day for Washington County. Factoring in all potable water use, including second home, commercial, institutional and industrial use, the total is 230 per capita gallons per day.

The same report also showed that Washington County had conserved 1 billion gallons over a five year period.

"If you're a water district that's tasked with providing a whole panorama of water for the community as a wholesaler, then we need to know every one of those factors…that we tack onto that overall per capita use," Thompson said. "I think we're headed in giving out that figure here shortly."

There is also no uniformity in water use measurement from place to place, Thompson said. For example, in Clark County, Nevada, water officials look at a customer's net meter water use minus the return flow back to Lake Mead. In Utah, officials look at the gross metering involved in every use and put it all together in an equivalent residential unit.

So when compared to other communities, Washington County is going to look higher than others, Thompson said.

"When you start getting underneath the numbers and look at water we're really using inside our residences and using outside, we're doing much better than people give us credit for," he said.

The 140-mile, 70-inch diameter Lake Powell Pipeline will run from Lake Powell to the Sand Hollow Reservoir with a projected route that will snake across the Utah and Arizona border over public and private land, and carry around 77 million gallons a day to 13 communities in Kane and Washington counties.

Preliminary cost to build the pipeline is estimated between $1.2 and $1.8 billion, though project opponents claim it may be closer to $3 billion.

Return to Top

Other Agencies

The Energy Daily
June 10, 2019

EPA tries to limit state authority to block pipes

| BY JIM DAY

Stepping up the Trump administration's attack on states' ability to block fossil fuel infrastructure projects, the Environmental Protection Agency released guidance Friday that claims federal agencies have significant discretion to limit the time allotted to states to make decisions on Clean Water Act permit applications as well as the grounds on which states may

deny permits—thereby giving federal agencies greater ability to push through pipelines over state objections.

Specifically, the non-binding guidance released by EPA Administrator Andrew Wheeler states that Clean Water Act (CWA) Section 401 “does not guarantee that a state or tribe may take a full year to act on a Section 401 certification request, but only grants as much time as is reasonable.”

Based on that interpretation of Section 401, the new EPA guidance says permitting agencies such as the Federal Energy Regulatory Commission may establish new timelines of less than one year for states to act on the Section 401 decisions, as long as the new timeline is considered “reasonable.”

EPA makes clear that the new guidance is not binding and does not change any statutory language or regulations. Importantly, the statutory language in the CWA specifically states that state consideration of Section 401 permits “shall not exceed one year”—a time limit that has repeatedly been upheld by FERC and the courts.

EPA says it has launched a rulemaking process to codify the CWA guidance in its regulations, and it is encouraging other agencies to incorporate EPA’s guidance in their Section 401 process.

However, given its clash with clear language in CWA language giving states up to one year to act on Section 401 applications, EPA and other agencies that adopt the guidance to limit state decision-making on permits appear certain to be sued by Democratic-led states intent on blocking fossil fuel projects. New York, Oregon, Washington, New Jersey have recently rejected Section 401 permits for natural gas pipelines and oil and gas export terminals.

EPA’s guidance also runs counter to multiple FERC decisions in which that agency has ruled that states and tribal authorities have up to one year to act on Section 401 permits for pipelines, dams and other infrastructure.

In addition, courts have consistently affirmed that agencies have a year to act, and a recent ruling by the U.S. Court of Appeals for the District of Columbia Circuit clarified that under no circumstance may the clock be extended beyond a year—leaving in place past precedent that says states must act on Section 401 permit applications within a year of their submission or waive their authority to rule on the applications.

At issue is language in CWA Section 401 that states: “If the state, interstate agency, or administrator…fails or refuses to act on a request for certification, within a reasonable period of time (which shall not exceed one year) after receipt of such request, the certification requirements of this subsection shall be waived with respect to such federal application.”

EPA’s new guidance appears to interpret that one-year deadline as a ceiling, under which federal agencies could set shorter deadlines as long as they are “reasonable.”

The guidance comes as the oil and gas industry has become increasingly frustrated over the growing number of states blocking fossil fuel infrastructure—and fearful that other Democratic governors will join in under pressure from green groups now seeking complete phase-out of fossil fuels.

The industry has been pressing the Trump administration to restrict the states’ Section 401 authority, and in April President Trump signed an executive order directing EPA to issue new guidance and regulations on Section 401 implementation, with a focus on shortening the timeline and reducing the grounds on which states may deny the permits.

Friday’s non-binding guidance from EPA delivers on that order.

“Consistent with Section 401’s general provisions and the EPA’s existing regulations, federal permitting agencies have the authority and discretion to establish certification timelines so long as they are reasonable and do not exceed one year,” the EPA guidance states, adding that nothing in the CWA prohibits federal agencies from modifying their established timelines.

EPA also changed its guidance to reflect a new interpretation that states may only deny Section 401 permits based on projects’ direct impacts on water quality and not for possible violations of other state environmental laws, such as those meant to reduce greenhouse gas impacts. It also questions whether states may place conditions on certifications that go beyond impacts to water quality.

“If a state or tribe issues a Section 401 certification with conditions beyond the scope of Section 401, i.e., conditions not related to water quality requirements, or has denied a water quality certification for reasons beyond the scope of Section 401, federal permitting agencies should work with their Office of General Counsel and the EPA to determine whether a permit or license should be issued with those conditions or if waiver has occurred.”

That interpretation also appears to go against a 2006 Supreme Court ruling that found state Section 401 certifications could address a broad range of types of pollution.

EPA’s attempt to change the Section 401 process has been vehemently opposed by several non-partisan state government organizations, including the Association of Clean Water Administrators (ACWA) and the Western Governors’ Association, which includes about 12 Republican leaders in states Trump won.

“It is not clear that changes to the CWA Section 401 certification are needed, as states have consistently exercised their authority under Section 401 in an efficient, effective, and equitable manner,” the ACWA told EPA in a May 24 letter. “States are also firmly against any clarifications to CWA Section 401 or changes to related federal regulations and guidance that may curtail or reduce state authority under CWA Section 401....”

They also complain that EPA has not consulted with the states in making the changes, or explained exactly why EPA is taking this action.

Return to Top

Greenwire
June 7, 2019
CLEAN WATER ACT

EPA curbs state power to deny permits for climate concerns

Ariel Wittenberg, E&E News reporter

EPA says it can issue federal permits for projects, including pipelines, regardless of whether states raise questions about impacts to climate change or air pollution.

Section 401 of the Clean Water Act gives states the right to "certify" that projects requiring federal permits comply with both the act and their water quality standards. That means projects being permitted federally by EPA, the Army Corps of Engineers or the Federal Energy Regulatory Commission also must be approved, denied or approved with conditions by states.

In recent years, New York and Washington have used this certification process to deny permits for pipelines and coal terminals not just due to water quality concerns, but also because of their contribution to air pollution and climate change.

Guidance issued today by EPA seeks to limit that practice. The guidance is meant as a stand-in while EPA works on formal regulations.

The guidance itself doesn't carry the rule of law, and therefore states are not bound by it. But it serves as a significant warning shot. States that ignore EPA guidance could well find themselves in court, either fighting EPA for ignoring their certification decisions or fighting with industry.

It says that state certifications should be limited to water quality issues and standards described in the Clean Water Act.

If a state tries to deny a permit or place conditions on it unrelated to water quality, EPA says federal agencies should discuss whether the state has waived its right to certify the project and allow the permit to proceed anyway.

"Though Section 401 envisions a robust state and tribal role in federal permitting and licensing process, it places limitations on how that role may be implemented to maintain an efficient permitting process within the overall cooperative federalism construct established by the (Clean Water Act)," EPA wrote.

The guidance document also limits how much time states have to make their certification decisions.

The Clean Water Act itself gives them up to a year but does not say whether that timeline begins once a permit application has been received or once a state deems it has enough information to make a decision.

That has resulted in state reviews taking multiple years as they ask applicants for more information about how projects might affect water quality or the environment.

EPA's guidance today clarifies that the clock begins when a state receives an application and cannot be stopped even if applicants don't respond to state requests for more information or if states want to wait for federal environmental assessments to be completed before making their decisions.

"An outstanding or unfulfilled request for information or documents does not pause or toll the timeline for action on a certification request," the guidance says.

It argues that although "outstanding information requests or non-responsive project proponents can be challenging, the EPA recognizes that states and tribes are water resource experts and have significant experience issuing permits and approvals for many types of projects, including for discharges to waters, dredge and fill projects, and above- and below-ground pipelines in their jurisdictions."

"EPA encourages states and tribes to evaluate the potential risk associated with information or data gaps and consider issuing timely certification with conditions that may address those potential risks," the guidance says.

Trump's order and reaction

The document follows President Trump's April executive order directing EPA to look at its regulations for Clean Water Act certifications as a way to boost the oil and gas industry (***Energywire***, April 9).

Senate Republicans, who were supportive of Trump's order, are already applauding the new guidance.

"States should not be able to hijack the Clean Water Act to shut down important energy

projects," Environment and Public Works Chairman John Barrasso (R-Wyo.) said in a statement. "We need reform, and we need it fast. States like Washington, New York, and New Jersey are preventing us from using and exporting our energy resources. President Trump and I share a strong commitment to addressing this critical issue."

Industry groups are also praising the guidance.

"We welcome this guidance as clear guideposts for federal, state and tribal authorities are needed that respect and support the important and distinctive roles of each participant," said Don Santa, CEO of the Interstate Natural Gas Association of America.

But the move is likely to be opposed by states and state groups accusing the Trump administration of trampling on states' rights.

The Western Governors' Association, which represents 19 states and three Pacific territories, has long been critical of any attempt to limit states' Clean Water Act certifications and last month told EPA that "curtailing or reducing state authority under CWA Section 401, or the vital role of states in maintaining water quality within their boundaries, would inflict serious harm to the division of state and federal authorities established by Congress."

Today, the group said it "remains concerned about EPA's guidance addressing states' authority to protect and manage their water resources under Clean Water Act."

Legal questions

It's not clear whether EPA's new stance would stand up in court.

While courts of appeals have recently issued rulings supporting the idea that states must stick to a one-year timeline and that having an applicant withdraw and then resubmit a permit application does not restart the clock, case law on the scope of certifications is less supportive of EPA's stance.

While courts have not directly addressed the question of climate change in Section 401 reviews, they have largely found that states have the right to issue conditions and denials that they want.

In 1997, for example, the 2nd U.S. Circuit Court of Appeals ruled that FERC could not invalidate conditions set by the state of Vermont about construction timelines.

In 1994, the Supreme Court ruled in *Public Utility District No. 1 of Jefferson County v. Washington Department of Ecology* that states could condition hydropower permits to ensure minimum stream flows, even though stream flow is not something directly addressed in the Clean Water Act.

That's something EPA's guidance seems to recognize, stating, "Some courts in limited jurisdictions have concluded that the [Clean Water Act] does not authorize federal permitting agencies to reject conditions of a Section 401 Certification and that a federal license or permit must contain all conditions of a certification."

Twitter: @arielwittenberg Email: awittenberg@eenews.net

Return to Top

S&P Global Platts

June 7, 2019

Gas sector applauds as EPA provides guidance on state water reviews

By Maya Weber

The Environmental Protection Agency released new guidance on state Section 401 Clean Water Act reviews that appears to answer calls from the natural gas pipeline sector and other industries to provide a check against delays and confine the scope of state reviews that have in some cases held up projects. It also encourages limits on state information requests.

Some Northeast pipeline projects have stalled over those state reviews, and the Trump administration and industry have accused New York in particular of abusing its authority in order to block projects. President Donald Trump called for guidance in an executive order April 10.

The EPA guidance was immediately welcomed by natural gas industry groups, which argued it would help restore needed balance to the process, while environmentalists worried it would ramp up federal agency powers at the expense of states that have more localized expertise of water quality impacts.

Feds setting timelines

On the timing of reviews, the guidance holds that federal regulators have discretion to set "reasonable" timeframes, potentially shorter than one year. In interstate natural gas pipeline reviews, the Federal Energy Regulatory Commission has interpreted the limit as one year, and some courts have pointed to that as well. The US Army Corps of Engineers has used a 60-day period and often granted extensions. Federal agencies could consider the complexity of projects in setting the clock for individual projects.

The guidance also appears to curb information requests from states as part of the reviews.

"To evaluate a certification request, a state or tribe should only need the application materials submitted for the federal permit or license," it said. In some cases, disputes over denials have centered on whether project applicants have supplied adequate information.

The guidance acknowledges that in some cases states may want an environmental assessment or environmental impact statement, but it again tries to head off delays. It recommends the state not delay action until a National Environmental Policy Act review is complete, unless the information request comes near the end of the NEPA process.

In addressing data gaps, EPA encouraged states and tribes to consider issuing timely certifications with conditions that may address those gaps, rather than holding up an application.

Waivers based on scope

On another important matter, the scope of the state reviews would be limited to an evaluation of water quality impacts. In cases where states go outside those bounds, federal permitting agencies and EPA would work to determine if a permit should be issued, or whether the state review should be waived. State conditions, such as requiring multimillion dollar mitigation funds, have sometimes rankled project developers. There has also been debate over whether states can consider project routing and various state law requirements in water quality reviews.

The guidance also recommends a notice in writing to give developers a heads up, if states foresee a denial, identifying reasons and outstanding data.

Several sections also encourage up-front communication and coordination among the state and federal agencies.

The Interstate Natural Gas Association of America welcomed the guidance, saying it respects the role of states and tribes in the protection of water quality, but that some states viewed Section 401 as a means of determining which pipeline projects are in the public interest and which are not.

“EPA ’s guidance is needed to restore efficient and consistent implementation of Section 401 reviews,” said INGAA President Don Santa.

‘Power away from states’

Moneen Nasmith, an attorney with Earthjustice , said the guidance appears to be a “sneaky attempt to claw a lot of power away from the states,” despite Congress having granted them that authority.

“Congress recognized that states are the experts in water quality in their own waterways” and will know specifically what information they need, she said.

Dena Wiggins of the Natural Gas Supply Association said the guidance "enhances the predictability and efficiency of the permitting process.”

The action was also welcomed by Williams, which recently had water quality certifications denied by New York and New Jersey for its Northeast Supply Enhancement project and has been in litigation for years over New York ’s denial of the Constitution Pipeline project.

Also following on Trump’s executive order, EPA has a new rulemaking in the works that it says will modernize Section 401 implementing regulations . That is expected out by August 10.

Return to Top

States

Sacramento Bee
June 7, 2019

As its leaders tour Paradise, PG&E warns it may cut power amid extreme CA fire risk

BY MICHAEL MCGOUGH AND

DALE KASLER

As its leaders toured the town burned out by the state’s worst fire in history, Pacific Gas and Electric Co. says it is monitoring Northern California weather and might enact public safety power shutoffs Saturday or Sunday, the first this year, that could affect dozens of cities amid “extreme” fire risk conditions in the Sierra foothills and North Bay Area.

The National Weather Service’s Sacramento and Bay Area offices on Friday morning put Red Flag Warnings into effect for most of the weekend, as high temperatures, low humidity and gusty winds will combine to create a critical threat of fire activity.

PG&E said a potential public safety power shutoff could occur within the next 18 to 36 hours, in an advisory tweet and news release about 12:30 p.m. Friday.

California Assemblyman James Gallagher, whose district includes Butte and Yuba counties, shared PG&E’s announcement almost immediately to his official Facebook page, warning that

areas affected in a potential shutdown in those two counties would include parts of Paradise, Chico, Oroville, Berry Creek, Browns Valley, Marysville, Wheatland and other nearby areas.

“I wanted to notify you of an announcement from PG&E this morning that it might proactively turn power off in several Northern California counties within the next 18 to 36 hours to reduce the risk of wildfire,” Gallagher wrote. “Power might be shut off starting around 9 p.m. on Saturday with the peak period of fire risk lasting until 10 a.m. on Sunday.”

PG&E says it is working with Cal Fire and the state Office of Emergency Services, as well as monitoring National Weather Service data, to monitor conditions.

“To help reduce the risk of wildfire and keep our customers, their families and their homes and businesses safe, the company may be turning off power in areas of the North Bay and the Sierra foothills where extreme fire risks exist,” PG&E said in a news release.

Other cities where power may be shut off include parts of Davis, Winters, Vacaville, Auburn, Suisun City, Lincoln, Napa, and Lake Berryessa, as well as other portions of Butte, Yuba, Nevada, El Dorado, Placer, Yolo, Solano and Napa counties, according to the news release.

“We know how much our customers rely on electric service and would only consider temporarily turning off power in the interest of safety during extreme weather conditions,” Michael Lewis, PG&E’s senior vice president of electric operations, said in a prepared statement.

The announcement came as top leaders of PG&E Corp. toured the area devastated by the Camp Fire.

The tour, which was ordered last month by the federal judge overseeing the utility’s criminal probation, took place Friday but details of the trip were closely guarded. The San Francisco Chronicle published photographs showing the group of leaders in Paradise on Friday.

Paradise Mayor Jody Jones and Town Council member Michael Zuccolillo said they met with PG&E Chief Executive Bill Johnson when he toured their town privately about two weeks ago. At the time, Johnson told them he and the PG&E board of directors — a group of 13 high-powered financial and energy executives — would visit Friday.

The Chronicle reported that a large white bus carrying Johnson and U.S. District Judge William Alsup, among others, pulled up to the Paradise Performing Arts Center and “filed into a room in the back of the building.” Both the Chronicle and a Bee reporter in Paradise were rebuffed by officials during the day, and the leaders did not answer any questions of journalists who had spotted the group.

“It is a private thing, at the order of Judge Alsup, to impress upon the board and the new chief executive of PG&E about the magnitude of what their company caused,” said Mark Noel, Butte County’s supervising deputy district attorney. The DA’s office helped coordinate the executives’ visit. “It is not a social thing, not a press thing.”

At about the same time Johnson took over in April, the company overhauled its board of directors to put a greater emphasis on leaders with expertise in utility safety. The new board chairwoman is Nora Mead Brownell, a former commissioner of the Federal Energy Regulatory Commission.

But its board also includes several executives from the world of finance, causing Gov. Gavin Newsom and other state officials to accuse the company of putting profits ahead of safety. Among the directors are Richard Barrera, founder of New York hedge fund Roystone Capital Management; Kenneth Liang, a former managing director with Los Angeles investment firm Oaktree Capital Management; and Eric Mullins, co-CEO of Lime Rock Resources, an energy-investment firm based in Houston.

Company representatives seen at Friday's trip would not provide the Chronicle the names of everyone on the trip. PG&E spokesman James Noonan declined comment Thursday, referring a reporter to the U.S. Probation Office, which is coordinating the trip.

A spokeswoman for the department, Lynn Fuller, said in an email to The Bee: "For security reasons, the Court will not at this time say when or where the event will be or whether it has already occurred; the Court will release a further statement in due course."

Cal Fire has declared that November's Camp Fire, which killed 85 people and destroyed 90 percent of Paradise's housing stock, was caused by malfunctioning PG&E equipment.

Alsup, who has been critical of PG&E's safety record, ordered Johnson and the board of directors to tour Paradise by mid-July. In his written order last month, Alsup told the executives to get "a firsthand understanding of the harm inflicted on those communities and meet with victims and others stakeholders, such as fire-fighting personnel and/or city officials."

Alsup has taken a supervisory role in PG&E's affairs because the company is on probation after being found guilty in connection with the 2010 pipeline explosion that killed eight people in San Bruno.

The company has pledged to spend $105 million helping Camp Fire survivors with living expenses.

Facing an estimated $30 billion in liabilities from the Camp Fire and the 2017 wine country fires, PG&E filed for bankruptcy in January. The company has come under intense pressure from state officials to reform its corporate culture and improve its safety record.

Return to Top

S&P Global
June 7, 2019

PG&E warns of power cuts amid extreme wildfire risk in northern California

By Garrett Hering Market Intelligence

Pacific Gas and Electric Co., or PG&E, issued a warning June 7 that it may cut power to tens of thousands of customers in the next two days in an effort to prevent its electric infrastructure from sparking the kinds of wildfires that ravaged wide swaths of its northern California service territory in 2017 and 2018.

PG&E named several of the same counties hit by wildfires in the past two years as potential locations where it could begin rolling out preventive blackouts, a core part of its 2019 wildfire safety plan. Among the areas that could see power outages over the weekend are portions of

Butte County, including the town of Paradise, which was largely destroyed in the 2018 Camp Fire, as well as parts of El Dorado, Napa, Nevada, Placer, Solana, Yolo and Yuba Counties. The counties are all in the North San Francisco Bay Area and the foothills of the Sierra Nevada mountains, where state fire officials have said extreme fire risk exists amid rising temperatures and potentially high winds.

"We know how much our customers rely on electric service and would only consider temporarily turning off power in the interest of safety during extreme weather conditions," said Michael Lewis, PG&E's senior vice president of electric operations, in a news release.

The utility is working with the California Department of Forestry and Fire Protection, the Governor's Office of Emergency Services and other state and local agencies "to help prepare for this potential safety event," PG&E said. It plans to alert customers ahead of any actual power cuts through automated calls, texts and emails.

PG&E and its parent company PG&E Corp. entered Chapter 11 bankruptcy protection in January related to liabilities potentially in excess of $30 billion related to the 2017 and 2018 blazes.

Return to Top

EnergyWire
June 10, 2019

ENERGY TRANSITIONS

Mich. utility gets OK for landmark plan to ditch coal

Jeffrey Tomich, E&E News reporter

A Midwest utility that for decades relied on coal as a primary fuel source won approval for a sweeping plan Friday that includes the largest build-out of solar development by any utility in the region and no new fossil fuel generation.

The Michigan Public Service Commission unanimously approved Consumers Energy's integrated resource plan, which calls for the utility to close its remaining coal plants and rely solely on renewable energy and reductions in energy demand over the next two decades. Overall, the plan, which would need approval by the Michigan PSC, would increase renewable energy from 11% of the utility's fuel mix to 37% by 2030 and 56% by 2040.

Analysts say the PSC's order is an important milestone because it shows that regulators and utilities see a pathway to skip natural gas as a so-called bridge fuel in a region of the country that has long depended on fossil fuels.

"The fact that Consumers has put forth a plan to shut down coal units and replace them with renewables and demand-side programs is a huge deal," said Margrethe Kearney, an attorney for the Chicago-based Environmental Law and Policy Center, which was a party in the case. Currently, Michigan gets about a quarter of its power from natural gas, according to the U.S. Energy Information Administration.

Consumers Energy CEO Patti Poppe said in a call with reporters that "there used to be a day when there was sort of a sucker's choice, you could have clean and expensive energy or cheap and dirty stuff, and it's just not the case anymore."

The IRP lays out the company's preference for meeting the energy needs of its 1.8 million customers for the next 15 years. When it began modeling in 2016, Consumer's Energy expected a 30% price reduction in solar costs over the life of the IRP. Instead, prices dropped over the two years the plan was developed.

"By the time we filed the case, the assumptions were driven by currently available market pricing," Poppe said.

Michigan PSC Chairwoman Sally Talberg likewise said the Consumers Energy plan — the first approved under new state energy laws enacted in 2016 — is notable because it represents a shift not only to cleaner energy, but also toward smaller, competitively bid energy projects.

"This will help the utility and its customers adapt to changing market conditions and system needs, Talberg said.

The text approved Friday closely resembles the proposal put forward by the utility a year ago. Key components include:

Shutting the 515-megawatt Karn coal plant near Bay City, Mich., in 2023, almost a decade ahead of schedule. Under a settlement with environmental groups and other parties, the utility will also analyze the economics of its 1,540 MW Campbell coal plant and possibly retire it by 2025. The plant is currently set to shut down in the 2030s.

Adding 6,350 MW of new competitively bid solar capacity over the next 15 years, including 1,200 MW between 2019 and 2021.

Investing in energy efficiency that will reduce energy demand across its service area by 718 MW, or about 2% of electricity sales. The plan also includes a demand-response program that will cut peak demand by 607 MW.

The clean energy push is part of Consumers Energy's broader goal to reduce carbon emissions 90% and eliminate the use of coal by 2040.

'A fundamental shift'

The coal closures continue a trend for the company, which retired a group of seven coal-fired units known as the "Classic Seven" in 2016, and for Michigan utilities in general.

Detroit-based DTE Energy Co., likewise, is retiring many of its older units on a similar path to eliminating coal from its power plant fleet by 2040 and won approval from the PSC last year to replace the coal-fueled power with a $1 billion, 1,100 MW natural gas plant (Energywire, April 30, 2018).

Since then, Midwest utilities such as Consumers Energy and Northern Indiana Public Service Co. (NIPSCO) have put forward plans that include no new fossil generating plants. More recently, the Indiana Utility Regulatory Commission rejected Vectren Corp.'s proposal for a $900 million natural gas plant that was proposed to replace retiring coal units (Greenwire, April 24).

The Consumers Energy plan also requires the use of competitive bidding to line up future power supplies, beginning this fall. The utility will own half the new capacity and purchase the rest through long-term contracts.

The framework approved Friday was the product of a settlement entered into by Consumers Energy with PSC staff, environmental advocates including Sierra Club and the Natural Resources Defense Council, and consumer groups.

"This resource plan is a fundamental shift for Michigan's electric utilities that is long overdue," Ariana Gonzalez, an NRDC senior policy analyst, said in a statement. "Consumers sets a high bar and makes good on its ambitious goals to cut carbon by doubling down on clean energy rather than relying on unnecessary gas-fired power plants.

Other environmental and clean energy advocates didn't sign on to the settlement but agreed

not to oppose it.

The Solar Energy Industries Association (SEIA) and solar developer Cypress Creek Renewables did challenge the utility proposal because it didn't resolve a looming question over efforts by solar developers to sell energy to Consumers Energy under the federal Public Utility Regulatory Policies Act (PURPA).

"It's disappointing to see that the commission did not resolve a key issue of how the 4 gigawatts of solar in the existing interconnection queue will participate in satisfying Consumers' Resource Plan," said Sean Gallagher, vice president of state affairs for SEIA. While we look forward to ensuring that solar delivers for Michigan customers, the Commission missed an opportunity to prevent further disputes around these issues, which unfortunately are likely to continue."

Twitter: @jefftomich Email: jtomich@eenews.net

Return to Top

ClimateWire
June 10, 2019
MAINE

Bill to study emissions from hydropower project fails

A bill to study whether a proposed 145-mile transmission line in western Maine will actually reduce greenhouse gas emissions has failed.

The Maine House's 74-65 Thursday vote effectively killed the bill, which had backing from critics of the New England Clean Energy Connect project.

The Central Maine Power Co.'s project would allow 1,200 megawatts of Canadian hydropower to reach Massachusetts consumers to meet that state's green energy goals. Maine utility regulators have found the project will reduce carbon pollution, lower electric rates and provide $258 million in incentives in Maine.

The bill would have allowed Maine's environmental agency to accept funds from any public or private source to fund the independent study.

Democrats had proposed using $150,000 in state funds or accepting funding that could create a conflict of interest. — Associated Press

Return to Top

International/Misc.

S&P Global Platts
June 7, 2019

Trump signals deal with Mexico may avert 5% tariff Monday

By Brian Scheid

President Trump signaled Friday that a 5% tariff set to be imposed Monday on all Mexican imports , including on a top crude feedstock for US Gulf Coastrefiners, may be averted if a deal can be struck with the Mexican government

“If we are able to make the deal with Mexico , & there is a good chance that we will, they will begin purchasing Farm & Agricultural products at very high levels, starting immediately,” Trump tweeted Friday while en route to Washington from Europe . “If we are unable to make the deal, Mexico will begin paying Tariffs at the 5% level on Monday!”

Trump had previously tied the tariffs to illegal migration and it remained unclear Friday why the president was now linking the tariffs to trade issues.

Earlier Friday, White House Press Secretary Sarah Sanders told reporters that the administration was still on track to impose the tariffs Monday.

“Our position hasn’t changed,” Sanders told reporters, according to a press pool report. “Tariffs are going to take effect on Monday.”

Mexico is the top source of crude imports for Gulf Coast refiners. In March, nearly 30% or more than 600,000 b/d of crude imported by Gulf Coast refiners came from Mexico .

A 5% tariff would add about $3/b to the price of Mexico 's Maya crude , cutting US Gulf Coast refinery coking margins for Maya to $4.95/b from the current May average of $8.08/b, S&P Global Platts margin data shows. A 10% tariff would shrink the margin to $1.82/b, and a 25% tariff would reduce it to minus $7.58/b, making imports of Maya uneconomical.

Mexico is not expected to impose retaliatory tariffs on US natural gas imports because of the country’s reliance on gas for power and industrial demand.

But US tariffs could slow Mexico 's industrial growth and, in turn, reduce gas demand in the country’s industrial and manufacturing sectors.

Platts Analytics estimates that Mexico industrial demand for natural gas averaged 2.4 Bcf/d in 2018, representing 30% of Mexico 's total gas demand.

If imposed Monday, the 5% tariff would escalate to 25% by October. Trump is expected to sign a legal notification of the tariff Friday.

Return to Top

From: Celeste Miller on behalf of MediaDL
To: NewsDL
Subject: June 14 news clips
Date: Friday, June 14, 2019 8:05:49 AM

Friday, June 14, 2019 Visit our News Clips website

TOP STORIES

FERC chair: 'Complex legal challenges' must be addressed before DER rule can be issued
FERC Dems Make Climate Change Case In House Hearing
Lawmakers launch another push to establish public advocacy office at FERC

ELECTRIC

FERC to review SCE bid for huge ROE hike for wildfire risks
New England to retain Exelon's Mystic gas units for fuel security until mid-2024
FERC rejects utility's gripes, sides with PJM on latest transmission cost allocations
Stakeholders warn PJM FTR market changes will adversely impact prices, harm consumers
'Most dangerous' hackers targeting U.S. utilities — report
Dairyland Power took coal plant offline because of flooding, but it could be saving money buying power from the grid

GAS/LNG/OIL PIPELINES

FERC to conduct EIS for Louisiana gas transmission line project
Mountain Valley sticking to schedule following Southgate setback
North Carolina nixes water permit for Mountain Valley pipe extension
'They care about corporations:' Landowners demonstrate pipeline project's toll
Cheniere plans to put big part of Midship pipeline in service in October
Corpus Christi LNG Train 2 begins LNG production

CONGRESS

Rep. Lynch urges state to hit reset on compressor project
House draft bill would phase out long-standing pipe risk analysis method
US House bill could extend wind production tax credit, expand storage incentive
GOP leaders push back on reports Dems want PTC, ITC extension

OTHER AGENCIES

Here comes the carbon rule. What to know

STATES

DRBC OKs permit for New Jersey port that could handle LNG export cargoes

INTERNATIONAL/MISC.

Floating regasification plants open overseas markets for LNG producers

Top Stories

Utilitydive.com
June 13, 2019

FERC chair: 'Complex legal challenges' must be addressed before DER rule can be issued

AUTHOR Robert Walton@TeamWetDog
Dive Brief:

All four Federal Energy Regulatory Commissioners testified before a House subcommittee on Wednesday, taking a wide range of question about the agency's oversight and action on issues ranging from cybersecurity to state resource mixes.

FERC Chairman Neil Chatterjee told the House Energy and Commerce Committee's Subcommittee on Energy that the commission continues to struggle with "complex legal questions" regarding aggregated distributed energy resources (DERs), and it is not clear when a final rule to better incorporate them into markets may be forthcoming.

The commission also faced questions regarding capacity market rules for PJM Interconnection, ahead of the regional operator's August auction. FERC is considering whether to approve the grid operator's rule re-write, but that process is leaving little time for participants to prepare.

Dive Insight:

Prohibited by commission rules, FERC's regulators could give lawmakers few specifics when pressed on the commission's progress regarding DER integration and PJM's upcoming auction. Chatterjee told lawmakers that the commission has the information it needs to rule on DER integration, but regulators continue to "wrestle" with legal issues.

FERC held a technical conference in April 2018 on aggregated DERs, and the commission is "currently considering the record as we determine how to move forward," Chatterjee said.

This is not the first time lawmakers have pressed FERC for action. In February, Congressional Democrats sent the commission a letter urging regulators to finalize the DER rules. The commission approved rules for energy storage participation in February 2018, but has yet to finalize those.

And with PJM's capacity auction just two months away, lawmakers pressed for more certainty.

Chairman of the full House committee, Democrat Rep. Frank Pallone Jr, was present for the subcommittee's hearing. Pallone represents New Jersey, which participates in the PJM market.

"PJM participants are currently left in the lurch of both an old and new capacity market design," Pallone said. "The result of this uncertainty is higher electricity bills. It is vital that we figure this out immediately."

Rep. Mike Doyle, D-Pa., voiced similar concerns, saying if a rule is published just before the auction it wold not "give auction participants enough time to adjust," or an auction could be held with rules FERC has already rejected. "That raises lots of concerns and uncertainty,"

Doyle said.

Commissioner Cheryl LaFleur said she is "deeply, deeply troubled by the delay" and continues to press the commission for action.

But it is not clear there is an immediate solution.

Commissioner Richard Glick pointed out that "companies can't make investments without knowing where the government is going .... it is unclear on how the auction can go forward without action from FERC."

Cybersecurity issues were raised in the hearing, and in particular with regard to natural gas infrastructure — which falls to the purview of the Transportation Security Administration.

Glick said he has "serious concerns" about TSA's ability to protect pipelines, and LaFleur said Congress should consider more security requirements for gas infrastructure. "A structure with some teeth to it would be very helpful," she said.

Chatterjee said the commission is still working on grid resiliency issues, and is considering a task force to review fuel security issues with states. In 2018, the commission rejected the idea of subsidies for coal and nuclear plants, but opened a docket to consider grid resilience.

"States rights and the markets are colliding," Chatterjee told the subcommittee. "We want these markets to succeed ... but state actions are impacting the markets and we are trying to figure out how to sort through that. It has proven to be very challenging."

Return to Top

Law360
June 12, 2019

FERC Dems Make Climate Change Case In House Hearing

Law360 (June 12, 2019, 7:31 PM EDT) -- A U.S. House panel on Wednesday gave the Federal Energy Regulatory Commission's two Democrats a Capitol Hill platform to assert that the commission needs to beef up its climate change reviews of gas infrastructure projects, an issue over which they and their Republican counterparts are stubbornly split.

Repeating arguments they've raised in FERC project approval orders, monthly open meetings and public statements, Commissioners Richard Glick and Cheryl LaFleur told Democrats on the House Committee on Energy and Commerce's energy subcommittee that FERC is not fulfilling its legal obligations to evaluate the greenhouse gas emissions impacts of pipelines and other gas projects. That places them at odds with Chairman Neil Chatterjee and Commissioner Bernard McNamee.

Glick and LaFleur said their concerns have been validated by the D.C. Circuit's recently criticizing FERC's decision to limit its consideration of projects' GHG impacts. The appeals court said in a June 4 ruling that FERC's approach is based on an improper reading of the D.C. Circuit's decision in 2017's Sierra Club v. FERC, which said that the National Environmental Policy Act requires the commission to review indirect environmental impacts that are “reasonably foreseeable” and ordered FERC to review the downstream GHG impacts of the Sabal Trail pipeline.

“There's been some question recently as to whether the commission has the authority to look

at reasonably foreseeable greenhouse gas emissions, and I think the two court cases, including the one last week, have I think, put that question to bed," Glick told committee chairman Frank Pallone, D-N.J. "I think we clearly have that authority."

LaFleur, who has been recently performing her own GHG reviews in order to approve several gas projects, noted that the D.C. Circuit said last week in Birckhead et al. v. FERC that "because the Commission may therefore `deny a pipeline certificate on the ground that the pipeline would be too harmful to the environment,'" it is a "legally relevant cause" of downstream emissions of pipelines and should therefore take those emissions into account.

"I think the commission has been too stinting in its interpretation of [Sierra Club v. FERC]," LaFleur told Pallone. "I think the implications of the decision go much broader."

Lawmakers had no questions on the issue for FERC Chairman Neil Chatterjee, who has said he believes FERC's legal authority to review GHG impacts is limited. Chatterjee's fellow Republican, recently minted Commissioner Bernard McNamee, got a single query as to what FERC's GHG obligations are.

McNamee told Rep. Annie Kuster, D-N.H., that he examines a project's environmental impacts, including climate change, as part of his NEPA review. He said FERC has to look at the Natural Gas Act to determine how extensive their GHG reviews should be, but didn't say how.

"I don't think it'd be appropriate, because it's a legal issue that comes before us about what does the statute specifically mean ... but I personally take a serious look at the issues of greenhouse gas emissions, particularly pursuant to our NEPA responsibilities," McNamee said.

Both Glick and LaFleur have said that FERC isn't treating climate change impacts like other environmental impacts, including conditioning project approvals on mitigating their impacts. Rep. Bill Flores, R-Texas, asked Glick what would be acceptable GHG mitigation options for a liquefied natural gas export project. Glick suggested examples that included the project developer buying renewable energy credits or powering their operations with renewables or zero-carbon power.

FERC's pipeline review policy wasn't the only climate-related issue on lawmakers' minds Wednesday. Committee members also pressed FERC commissioners on how they plan to ensure that wholesale power markets can co-exist with increasingly aggressive state clean energy policies and when they will finalize a rule that makes a place for aggregated distributed energy resources such as rooftop solar in wholesale markets.

FERC recently finalized its rule giving energy storage a seat at the wholesale market table. Chatterjee said the commission has all the information it needs to push out a final rule on aggregated DERs, but still needs to ensure the rule is legally sound.

"We have some complex legal questions that we are currently wrestling with," Chatterjee told Rep. Paul Tonko, D-N.Y.

Committee members also pressed the commissioners about scrutinizing the governance of the regional grid operators that oversee the electric grid and run the wholesale markets subject to FERC jurisdiction. Several lawmakers expressed concern that consumer concerns are being ignored and regional grid operators aren't transparent enough about decisions that could ultimately impose millions, if not billions, of dollars in ratepayer costs.

LaFleur said it's "probably a good time for a re-look" at FERC Order No. 719, which revised regulations for organized wholesale markets to improve competition. But while Chatterjee

agreed that more transparency and consumer protection is needed, he cautioned against "a one-size-fits-all approach," noting that no two regional grid operators are alike.

--Editing by Peter Rozovsky.

Return to Top

Washington Examiner
June 13, 2019

Democratic Ferc Commissioners Want Mandatory Cyber Standards For Pipelines: FERC Democratic Commissioners pushed Wednesday for Congress to force pipelines to be subject to mandatory cybersecurity standards to keep them secure from attacks.

"The cybersecurity of pipelines is so important it would be worthwhile for Congress to require some sort of mandatory authority," Democratic Commissioner Cheryl LaFleur said in testimony before the House Energy and Commerce Committee.

LaFleur said the standards do not have to be enforced by FERC, noting it could be handled by the Department of Homeland Security, the Energy Department, or another agency.

But, she said, "A structure with some teeth to it would be very helpful."

Struggles under current system: The pipeline industry prefers FERC stick to a process being run by the Transportation Security Administration on a voluntary cyber program.

Democratic Commissioner Richard Glick, however, referenced a Government Accountability Office released this year that found TSA does not have a process to update its pipeline security guidelines, accusing the TSA of "weaknesses" in pipeline security. GAO found TSA's inspections of pipeline facilities fell from almost 180 in 2010 to about 80 last year.

Return to Top

S&P Global Platts
June 13, 2019

Lawmakers launch another push to establish public advocacy office at FERC

By Maya Weber

Legislation reintroduced in the House and Senate would again try to set up an office of public participation at the Federal Energy Regulatory Commissionthat would help represent interests of residential and small commercial interests in rates, service and infrastructure siting.

During a House Energy and Commerce hearing Wednesday, several lawmakers flagged concerns about consumers' or residents' frustrations about having their interests heard at FERC or in regional transmission organizations and independent system operators.

Representative Ann McLane Kuster, Democrat-New Hampshire , noted that she, along with Jan Schakowsky, Democrat-Illinois , and Joseph Kennedy, Democrat-New Hampshire , were introducing legislation that day to establish an office of public participation and consumer advocacy. Similar legislationwas introduced in the Senate by Jeanne Shaheen, Democrat-New Hampshire , and others in May.

The intent is to support public engagement and “advocate on behalf of residential and small commercial energy consumers,” according to a bill summary.

While Congress authorized an office of public participation in 1978, funds were never appropriated to establish the office, according to an aide to Kuster.

The new office would provide consultation services and technical assistance to ensure interests of the public are adequately represented. It would also provide intervenor funding and prepare reports and guidance to help improve industry and FERC practices to better incorporate the public voice.

The legislation would call for up to 125 full-time employees, and advocates could participate on behalf of energy customers in natural gas siting, infrastructure and rate and tariff cases. That could include cases before FERC , in federal courts and before other agencies.

Landowners' concerns

During the FERC oversight hearing Wednesday, Kuster invited Representative Morgan Griffith, Republican-Virginia , to join in backing the bill, after he read out a landowner’s concerns that assurances from FERC had proven untrue in considering needs of a family business when faced with a pipeline proposed to bisect a family farm. Griffith also has proposed pipeline fairness and transparency legislation .

Kuster complained that siting of a project through New Hampshire created obvious concerns for homeowners and towns, for instance, crossing between two schools a couple of hundred yards apart.

She said the legislation to create the new office would “elevate the voices of average Americans and ensure they have a seat at the table when FERC makes the approval decisions.”

As to landowners’ concerns, FERC Chairman Neil Chatterjee told the lawmakers that FERC is trying to make improvements to its landowner process and that it is also “incumbent upon project sponsors to be more responsive.”

One initiative under way at FERC is a website redesign intended to make information more easily accessible, said FERC spokeswoman Mary O’Driscoll. The intent is to make the use of the site more intuitive for the public, she said.

During the hearing, Kennedy also raised concerns about transparency in governance structures in regional transmission organizations and the public’s ability to understand the process in the New England Power Pool . He questioned FERC members on whether they were concerned about the potential for some industry stakeholder groups to have outsized power in RTOs.

Return to Top

Electric

The Energy Daily
June 14, 2019

FERC to review SCE bid for huge ROE hike for wildfire risks

June 14, 2019

Despite requests from some protesting parties that it dismiss the request outright, the Federal

Energy Regulatory Commission this week set evidentiary hearings on Southern California Edison's proposal for vastly increased return on equity on its transmission operations due to the threat of huge liabilities from wildfires ignited by its power lines.

The commission said it would review SCE's request for a 17.62 return on equity (ROE)—including an increase of 600 basis points for "extraordinary wildfire liability risks"—because its preliminary review of the proposal found it "may yield substantially excessive revenues" and thus appeared unjust and unreasonable.

However, the commission did not make any comment on a torrent of complaints by California public power utilities, consumer groups and the state's water agency that SCE's request for a wildfire risk premium was excessive and unwarranted. The protesters said SCE's wildfire risks were being addressed by California regulators and lawmakers and that it faced no liability under the state's inverse condemnation policy if it prudently managed its system to reduce fire risk.

And in setting up hearings to get more facts on SCE's ROE request, the commission did not act on a request by the M-S-R Public Power Agency that it summarily dismiss the utility's proposed 600 basis point wildfire adder, irrespective of any action it might take on the remaining portions of the proposal.

Interestingly, the California Public Utilities Commission did not object to FERC considering a wildfire risk premium for SCE, but said the utility's request was excessive.

For its part, SCE acknowledged that using FERC-recommended financial models resulted in a composite "zone of reasonableness" for its base ROE ranging from 6.7 percent to 12.5 percent with a midpoint of 9.6 percent. SCE said that since it is a utility with above-average risk, it should receive a base ROE of 11.12 percent.

But SCE said its conventional base ROE did not reflect the extraordinary wildfire liability risks that it faces, and that an ROE adder of 600 basis points "would be commensurate with the size and insurance cost of the wildfire problem," FERC said.

"SoCal Edison states that authorizing such an amount on top of the base ROE would provide additional investor returns needed to account for the severe wildfire risk SoCal Edison faces," the commission said in its Tuesday ruling.

Notably, SCE's wildlife risk premium request is much larger than a similar request made to FERC last year by Pacific Gas & Electric, which filed for bankruptcy in January due to more than $30 billion in wildfire liability claims.

PG&E sought to increase its base ROE from 10.2 percent to 12 percent to cover wildfire liability risks; that would increase its return on its transmission assets to $1.96 billion annually, nearly 10 percent more than it currently collects. FERC in December set that request for hearing citing concerns about potentially excessive returns, but did not specifically comment on the utility's contentions that the boost was warranted to cover wildfire risks.

Return to Top

S&P Global
June 13, 2019

New England to retain Exelon's Mystic gas units for fuel security until mid-2024

By Andrew Coffman Smith Market Intelligence

New England's power grid operator plans to retain Exelon Corp.'s natural gas-fired Mystic River 8 and 9 combined-cycle units for fuel security reasons for the commitment period covered by the region's 14th forward capacity auction.

In a recent letter to New England Power Pool's reliability committee, the ISO New England confirmed that about 1,400 MW of capacity from the uneconomic Mystic River power plant in Middlesex County, Mass., will be retained under a cost-of-service agreement for the June 2023-May 2024 commitment period.

The regional transmission organization said Mystic River 8 and 9, owned by Exelon subsidiary Exelon Power, are the only two resources that will be retained for fuel security for that period, noting that the analysis underlying the decision will be shared at the reliability committee's August meeting.

The Federal Energy Regulatory Commission in December 2018 approved the ISO-NE's plan to retain the Mystic River units via a cost-of-service contract for two years. To the dismay of other competitive generators, the ISO-NE did so after Exelon unsuccessfully attempted to delist the units from the 12th forward capacity auction, or FCA 12, in 2018 and subsequently announced plans to retire them in FCA 13.

On top of the need to retain the generating capacity that would be lost with the retirement of Mystic River 8 and 9, the ISO-NE said the cost-of-service arrangement was justified by concerns that allowing the units to close could jeopardize the continued financial viability of the adjacent Everett LNG terminal, owned by Exelon subsidiary Exelon Generation Co. LLC, by causing that facility to lose its biggest customer.

Under the cost-of-service agreement, the two Mystic units participated as price takers with zero-dollar bids in FCA 13, which was held in February and addresses the 2022-2023 commitment period. While the agreement already covers the 2023-2024 commitment period addressed by FCA 14, it also provides that the ISO-NE can terminate it for that year if the units no longer are needed for fuel security.

Exelon likewise can opt out of the deal, but the company indicated in a statement that it intends to continue honoring the agreement. "While some important aspects of the cost-of-service compensation [have] yet to be finalized with FERC, we look forward to operating Mystic 8 and 9, and the Everett LNG facility, to provide fuel security and electric reliability to New England in the near term," Exelon said.

As for beyond May 31, 2024, when the cost-of-service agreement expires, Exelon said it is "hopeful that ISO-NE will appropriately recognize that Mystic 8 and 9 and the Everett LNG facility provide a cost-effective solution for meeting regional reliability and fuel security requirements as part of its fuel security compensation proposal."

The ISO-NE is implementing market changes aimed at ensuring fuel security amid a regional shift away from a portfolio weighted heavily in favor of coal and oil-fired generation resources and toward a mix consisting primarily of weather-dependent intermittent renewable generation and interruptible "just-in-time" gas-fired generating resources. The grid operator repeatedly has warned that this systemic shift poses a reliability threat, especially during winter when natural gas pipelines can be constrained by heating demand.

In a further attempt to shore up grid reliability, the ISO-NE also is considering creating new markets to allow resources to manage their fuel security over several days. As part of those changes, the RTO is expected to propose a "multi-day" market that puts a price on an expected energy deficiency ahead of winter cold snaps. An ISO-NE official said in a recent interview that the grid operator will ask FERC in October to approve the changes.

Competitors' reaction, post-Mystic contingency planning

The ISO-NE's decision to retain the Mystic River units for another year came as no surprise to Dan Dolan, president of the New England Power Generators Association, which represents competitive electric generators in the region. However, Dolan criticized FERC and the ISO-NE for selectively compensating Mystic for fuel security and allowing it to participate in the forward capacity auction as a price taker, which he said "dramatically undervalues the same fuel security services provided by other generators."

"All products and services needed to maintain the reliability of the electric grid, including fuel security, should be priced into the market to avoid this type of one-off contract," Dolan said. "We should be [designing] the market for the future that New England will need to maintain reliability and competitive pricing for years to come, not the piecemeal approach that only looking at the narrow issue of fuel security contemplates."

In an April filing with FERC, the association requested that the ISO-NE's internal market monitor be required to explain the extent to which the Mystic River units' participation as price takers had lowered the clearing price of FCA 13. At $3.80/kW-month, the clearing price produced by that auction was the region's lowest in six years.

FERC foresaw the possibility of the Mystic River units staying online beyond May 2024. As a result, FERC in its order approving the cost-of-service agreement directed that a "clawback provision" be included specifying that if the units do not retire after the cost-of-service arrangement ends, Exelon must refund some of the money it was paid under that agreement.

As part of the brouhaha over the Mystic River situation, the ISO-NE told the NEPOOL Participants Committee in April that it has no intention of modifying its tariff to allow units that seek to retire to subsequently reenter the markets as existing resources. "As a consequence, the region must prepare to meet the transmission and fuel security needs associated with Mystic's retirement no later than June 1, 2024," the ISO-NE said.

In the same memo to NEPOOL, the ISO-NE outlined its preparation plans, explaining that it intends to rely on energy security improvements and to solicit transmission solutions to meet local reliability needs. However, as Mystic River's expected closure date is outside the ISO-NE's three-year planning window for addressing time-sensitive transmission needs, the RTO said it hopes to issue a request for proposals under its FERC Order 1000 competitive process in December.

Return to Top

S&P Global Platts
June 13, 2019

FERC rejects utility's gripes, sides with PJM on latest transmission cost allocations

By Jasmin Melvin

PJM Interconnection 's plan for allocating the costs of $467 million in new baseline transmission upgrades cleared the Federal Energy Regulatory Commission despite questions raised by Old Dominion Electric Cooperative.

The transmission upgrades are part of the PJM Regional Transmission Expansion Plan (RTEP), and represent transmission enhancements and expansions approved by the PJM Board of Managers February 12. The RTEP is comprised of projects that address different criteria, such as PJM planning procedures, reliability standards, and individual transmission owners' local planning criteria.

ODEC took issue with PJM 's cost responsibility assignments for two projects — b3077 and b3090 — with a combined estimated cost of $135 million. The electric cooperative argued that PJM 's March 14 filing (ER19-1301) lacked adequate information to support 100% cost allocation to a single zone for the two projects at issue. ODEC thus asked FERC in an April 15 filing to direct PJM to provide further clarification.

FERC said in an order Tuesday that it disagreed with ODEC's protest and found that PJM "acted in accordance with its tariff in assigning cost responsibility" for the 45 new transmission projects, including the two that drew ODEC's concern.

Confusion over what drove the upgrade

Project b3077 would resolve a reliability violation involving a generation deliverability issue, specifically the overload of the Franklin Pike B - Wayne 115 kV line caused by a single contingency tripping the Erie West - Wayne 345 kV line. It's projected to be in-service June 1, 2022.

PJM assigns 100% of the costs of projects that address reliability violations on transmission facilities operating at or below 200 kV to the zone where the facilities are located.

Pointing to the 115 kV line criteria violation and the 345 kV line contingency for project b3077, ODEC argued it was "unclear … which aspect of the identified reliability problem — the criteria violation or the contingency — is the determining factor for how PJM will assign cost responsibility for a transmissionenhancement."

But FERC found that PJM 's tariff "determines the cost allocation by the voltage of the transmission facility on which the reliability violation is identified, not the contingency

that provides the basis for an exemption from the competitive proposal window process," it said in the order.

Therefore, the voltage on the 115 kV line determined the cost allocation, the commission said, affirming PJM 's decision to allocate 100% of the estimated $15 million cost of the project to the Pennsylvania Electric Company zone where it is located.

Solution-based DFAX

ODEC also challenged PJM 's solution-based distribution factor (DFAX) analysis for project b3090 and sought data from PJM so it could independently verify the grid operator's cost assignment conclusion for that project.

With a targeted in-service date of January 1, 2021, the project would convert the roughly 1,500-foot overhead portion of two 230 kV lines to underground and modify a substation at an estimated cost of $120 million to improve operational performance. The entire cost of the network upgrade was allocated to Dominion .

PJM explained in a filing with FERC that the solution-based DFAX method generated a 1.62% value for the Dominion zone while the values for all other zones were all less than 1%. Under its tariff, the magnitude of the distribution factor must be at least 1% for a zone to be assigned cost responsibility.

"Because Dominion was the only zone with a solution-based DFAX method value above 1%, we find that, consistent with [PJM 's tariff], Dominion was appropriately allocated 100% of the costs responsibility for project b3090," FERC said.

Court remand

The commission, however, did stipulate that its order accepting the cost assignments with a June 12 effective date was subject to refund as the commission continues to weigh a court remand over the allocation of costs for projects that address local planning criteria.

The latest batch of PJM cost allocations to be accepted by the commission include:

four upgrades that operate as lower voltage facilities whose costs were allocated to beneficiaries using PJM 's solution-based distribution factor (DFAX) analysis;

13 projects that were included in the RTEP solely to address individual transmission owner Form No. 715 local planning criteria and whose costs were allocated to the zone of the relevant individual transmission owner;

23 enhancements that operate at or below 200 kV;

one enhancement costing less than $5 million; and

four enhancements needed to address spare parts, replacement equipment and circuit breakers.

Costs for the projects at or below 200 kV, costing under $5 million or addressing equipment needs were allocated to the zone in which the enhancements were located.

Return to Top

S&P Global Platts
June 13, 2019

Stakeholders warn PJM FTR market changes will adversely impact prices, harm consumers

By Jared Anderson

A group of energy traders active in PJM Interconnection ’s financial transmission rights market is urging the grid operator’s board of managers not to reduce the number of paths on which FTRs are offered and focus instead on best credit and risk management practices.

“As stated in the Report of the Independent Investigators, the GreenHat default in PJM was not related to the structure of the FTR market,” Noha Sidhom, executive director of the Energy Trading Institute, said in an email Thursday.

“The limitations to the FTR market currently being discussed by PJM staff will adversely impact prices and harm consumers,” Sidhom said. The Energy Trading Institute believes the focus of the stakeholder process should be on credit and risk management practices and ETI looks forward to continued discussions with PJM and market participants “to effectuate positive change,” she added.

PJM and its stakeholders are working to improve the FTR market and associated credit policy in the wake of a large default by GreenHat Energy on June 21, 2018. GreenHat amassed a large portfolio of FTR positions that did not require collateral and then defaulted, leaving PJM ’s members to pick up the bill.

Default allocation assessments have reached $113.3 million for GreenHat positions held through May 2019.

The energy traders group sent a letter and a white paper to the PJM board Wednesday. The paper details the benefits of FTRs and the need for enhanced credit and risk management protocols in PJM .

ETI’s correspondence is in response to a letter sent to the PJM board on May 24 from the Organization of PJM States, or OPSI, expressing concern that PJM ’s FTR market “lacks adequate financial protections for load.”

Costs to load

“It is critical that load receive the benefit of its investment in transmission without the necessity of being exposed to the consequences of a failure to properly design and manage the FTR Market,” OPSI said.

ETI also responded to a PJM Market Monitor presentation given to the Financial Risk Mitigation Senior Task Force in June.

“A crucial flaw in the OPSI letter and the Market Monitor ’s presentation is the assumption that replacing FTRs with direct allocation of congestion rents will reduce costs to consumers,” ETI said. Eliminating some FTR paths, as OPSI and the Market Monitor propose, would remove a key tool for hedging congestion risk that is “essential to ensuring consumers get the best price in standard offer default service or retail competitive markets,” they argued.

But the IMM contends under PJM ’s existing FTR market structure load has no control over FTR prices.

“The best course of action would be to return the FTR market to its fundamental purpose. The first step is to assign congestion revenue to load,” Joe Bowring, president of Monitoring Analytics, PJM ’s market monitor , said in a phone call Thursday.

“Load can then sell the rights to congestion in the form of FTRs to FTR buyers at an agreed price. PJM can decide how to structure that auction,” Bowring said.

The way the FTR market is designed now, the load has to accept the prices that buyers offer. The load cannot set a strike price below which they will not sell an FTR. “As a result, the load

receives only about 80% of congestion revenue under the current market design," Bowring said.

There are a couple of ways to modify the existing market structure to make it better, he said, and some helpful improvements would include eliminating long-term FTRs, reducing the number of paths and possibly increasing the frequency of auctions.

ETI is in favor of a rolling auction structure so there are more mark-to-auction opportunities.

PJM has yet to propose any FTR market rule changes. The stakeholder process is being conducted through the Financial Risk Mitigation Senior Task Force and any market, credit or risk management rule changes that impact the 2020/2021 FTR Annual Auction will need to be endorsed by the Members Committee by the end of 2019.

OPSI declined to comment.

Return to Top

EnergyWire
June 14, 2019
SECURITY

'Most dangerous' hackers targeting U.S. utilities — report

Blake Sobczak, E&E News reporter

Some of the world's most dangerous hackers have zeroed in on the U.S. power sector in recent months, according to a nonpublic alert issued by the North American Electric Reliability Corp. this spring and new research.

The grid regulator sounded the alarm on March 1 with the industrial cybersecurity firm Dragos Inc. over a notorious hacking group known as "Xenotime" in the report. Xenotime has been spotted hitting U.S. electric utilities with "reconnaissance and potential initial access operations" since late last year, the alert said.

The hacking group, infamous for infecting the safety systems of a Saudi petrochemical plant with highly specialized, life-threatening malware two years ago, isn't known to have broken through to the sensitive controls of U.S. power plants or substations.

The fact that the attackers behind the "Triton" malware can switch gears from hacking oil companies to electric utilities is significant, experts say, given the group's sophistication and its suspected ties to Russian intelligence agencies (Energywire, March 7).

"Xenotime remains the most dangerous cyberthreat in the world, with the capability and intent to kill people," said Sergio Caltagirone, vice president of threat intelligence at Dragos. "We've been very proactive at working with hundreds of electric utilities, preparing them with intelligence and defensive recommendations to best defend the U.S. electric grid against an attack from an adversary of this caliber."

Dragos reported last year that Xenotime had expanded the scope of its malicious operations to include U.S. targets, although the firm did not specify which sectors came into the hackers' crosshairs.

Today, the company issued a blog post detailing Xenotime's activity dating back to 2017. After hackers "successfully compromised several oil and gas environments," Xenotime has demonstrated "consistent, direct interest in electric utility operations" spanning North America to the Asia-Pacific region, Dragos said, citing work with unidentified clients. Dragos added

that Xenotime remains interested in oil and gas targets, calling the group's foray into a new industry "emblematic of an increasingly hostile industrial threat landscape."

While there's not evidence "at this time" that Xenotime is capable of executing a prolonged attack on utility operations, the hackers' latest efforts are "cause for definite concern," the Dragos post said.

FireEye Inc., which responded to the 2017 Triton infection at the Petro Rabigh petrochemical plant in Saudi Arabia, warned earlier this year that the same hackers had claimed at least one new "critical infrastructure" victim (Energywire, April 10). FireEye's report did not clarify whether the latest target saw its safety systems taken offline with Triton malware, which was tailor-made to override the Tricon line of Schneider Electric SE emergency shutdown equipment.

By disabling Tricon systems, the Xenotime hackers cut away a vital safety net from the Petro Rabigh complex, exposing workers there to potential explosions or chemical poisoning if the plant drifted outside normal operating conditions.

U.S. electric utilities have many of the same Schneider Electric safety devices installed at generating plants and some large electric substations, although the Tricon line is more commonly found in the oil, gas and chemicals industries.

The power sector isn't taking chances, and NERC is pushing to divert more resources into the fight against hackers.

The nonprofit grid overseer is seeking millions of dollars in new funding for its Electricity Information Sharing and Analysis Center (E-ISAC), a hub for getting the word out about the latest threats and weaknesses in the grid.

NERC's draft 2020 budget would set aside nearly $31 million for the E-ISAC — a 13% increase from this year — even as it trims spending outside the center.

The boost is part of a long-term strategy to upgrade the E-ISAC into a "world-class intelligence" nerve center for the power sector, according to NERC budget documents.

'They might not be hiding anything'

The NERC report on Xenotime occurred in the same week that Larry Bugh, chief security officer at ReliabilityFirst Corp., shared an eye-catching statistic at a grid reliability meeting in Pittsburgh: U.S. utilities haven't suffered a single cyber incident since at least 2015.

The day before Bugh's March 6 presentation, an unnamed electric utility in the western U.S. reported a cyber event that disrupted grid operations spanning Utah, Wyoming and California. The case — separate from the Xenotime alert — didn't cause blackouts, and sources later said it was likely an automated denial-of-service attack with a simple fix.

Bugh, as chairman of the Security Metrics Working Group at NERC, is looking to answer basic questions about the U.S. grid's vulnerability to such threats, be they basic DOS attacks or more sophisticated attempted intrusions like those from Xenotime.

At another meeting of NERC's Critical Infrastructure Protection Committee in Orlando, Fla., last week, participants pointed out that the power sector still lacks a comprehensive picture of its cyberdefenses.

Officials are still hoping to settle fundamental questions vexing Bugh's team: How often do physical and cybersecurity incidents strike? How many actually interrupt electricity service? Are gaps in utilities' digital defenses growing wider?

"My guess is that NERC and E-ISAC don't have the answers in hand," said Rebecca Slayton,

an associate professor at Cornell University who has studied NERC's security strategies in the past. "The other question is, do the utilities even know? They might not be hiding anything and just don't know what's going on in their networks."

NERC, as the federally designated Electric Reliability Organization, sets and enforces physical and cybersecurity rules for large utilities to follow. It has already handed down record-breaking penalties this year for security violations at several major power companies as new critical infrastructure protection standards take effect (Energywire, June 3).

Officials at the E-ISAC, meanwhile, are betting that additional outreach and round-the-clock staffing can entice utilities into sharing more data on cyberthreats barraging their systems. The E-ISAC pledges to keep information fed through its private portal well away from auditors at NERC's regional divisions or the Federal Energy Regulatory Commission, which has final say on any fines.

The dual approach has had NERC firing on all grid security cylinders in recent months — ramping up cybersecurity penalties while staffing up the E-ISAC.

NERC is also pursuing ways to extend its view beyond the bulk power grid through the "Neighborhood Keeper" project with Dragos.

That research and development effort, partly funded through the Department of Energy, would offer small power companies the chance to install Dragos' cyberdefense products in exchange for an anonymized stream of data from their systems. Smaller distribution utilities fall outside NERC's purview and don't typically need to share any details on hacking incidents (Energywire, Oct. 2, 2018).

"We are excited about the Neighborhood Keeper prospects, but it's too early to have a good sense of the actual insights," NERC spokeswoman Kimberly Mielcarek said in an emailed statement.

Near hits and misses

NERC is also widening the scope of cybersecurity data it collects from utilities that fall subject to its authority.

After many years of radio silence from big utilities, FERC recently ordered NERC to make changes, concluding that "the current reporting threshold may understate the true scope of cyber-related threats facing the Bulk-Power System" (Energywire, July 20, 2018).

Even as grid specialists in the halls of FERC and NERC's headquarters in Atlanta seek cybersecurity information, intelligence officials claim to have a handle on the extent of the danger.

Dan Coats, the U.S. director of national intelligence, said earlier this year that "Russia has the ability to execute cyber attacks in the United States that generate localized, temporary disruptive effects on critical infrastructure — such as disrupting an electrical distribution network for at least a few hours."

He cited a pair of cyberattacks on Ukraine's power grid, in 2015 and again in 2016, that each left hundreds of thousands of Ukrainians in the dark for several hours midwinter.

No similarly destructive grid cyberattacks have been seen before or since.

But last month, Chris Inglis, former deputy director of the National Security Agency, said Russian hackers are "managing 200,000 implants in U.S. critical infrastructure" — a claim that turned heads at last week's grid reliability meeting in Orlando (Energywire, May 22).

"If this is real, why hasn't there been a directive to do something about it?" noted Bryan Owen,

cybersecurity manager at technology vendor OSIsoft, who attended the Critical Infrastructure Protection Committee meeting.

Owen said that utilities' efforts to gather data on the cyberthreat "still feel modest" when compared with available metrics for safety incidents. He suggested expanding the scope of metrics to account for cyber "near misses" — not unlike the March 5 incident that didn't actually lead to a blackout.

"Ideally, we would be proactive enough that we don't have to have a lot of outages to improve," he said.

Twitter: @BlakeSobczak Email: bsobczak@eenews.net

Return to Top

Madison.com
June 13, 2019

Dairyland Power took coal plant offline because of flooding, but it could be saving money buying power from the grid

JENNIFER LU La Crosse Tribune

Dairyland Power Cooperative took its coal-fired power plant in Genoa offline at the beginning of June to avoid fuel shortages caused by the lack of barges carrying coal up a flooded Mississippi River.

Instead, the La Crosse-headquartered cooperative is purchasing electricity from the Midcontinent Independent System Operator Inc. market to make up for the power normally produced by the plant in Genoa, said Phil Moilien, Dairyland's vice president.

MISO manages a wholesale electricity market that spans several states in the Midwest, including parts of Wisconsin, Minnesota, Iowa, Illinois and Missouri.

At face value, buying power from the grid could be cheaper for Dairyland than running its coal plant.

Dairyland Power reports $16.5 million profit margin at annual meeting

Dairyland's 345-megawatt coal-fired power plant is one of 17 coal plants in Wisconsin. At 50 years old, it's the eighth oldest coal-burning power plant in the state.

Record flooding along the Mississippi River, especially in Missouri and Iowa, has delayed commercial barge traffic for months, keeping grain from moving downstream and fertilizers, cement, salt and coal from moving upstream.

Since the Genoa plant, situated along the Mississippi River, gets its coal solely by barge, Moilien said, Dairyland made the decision to temporarily halt operations "not because we are out of coal, but to ensure we have enough coal for the summer months."

Moilien declined to say how much coal it had stockpiled from the winter, saying the amount was "proprietary."

Dairyland, as a cooperative, is not required to share its operation and maintenance costs with the Federal Energy Regulatory Commission. The cooperative declined to say how much it costs to generate power at its Genoa plant.

However, Dairyland reported to the U.S. Energy Information Administration that its fuel cost $27.28 per megawatt-hour in 2017. And it costs about $17 per megawatt-hour to run the power plant, based on EIA modeling. Altogether, that's a combined cost of about $44 per megawatt-hour to produce electricity at a coal-fired power plant such as Dairyland's.

By comparison, it costs about $32 per megawatt-hour to buy power from the grid, according to MISO market figures from June 2018.

When the cost of operating a plant exceeds the market price, it's likely Dairyland could have saved money by buying power in the MISO market instead, said Christina Gosnell, co-founder and president of Catalyst Cooperative. Catalyst collects federal data and builds open-source tools to analyze utility information.

In other words, Gosnell said, "this seems like an expensive plant to run."

And while Dairyland saves money on fuel costs by buying from the grid, it spends about $14 per megawatt-hour to keep background operations going at the plant, even if the turbine isn't churning to make power.

It's surprising they're operating this plant since, as a cooperative, their goal is to provide the most value for co-op members, Gosnell said.

"Generally, the trend has been that the economics have flipped so that coal plants have become more expensive than they used to be," said Tom Content, executive director of the Citizens Utility Board, which advocates for "fair, safe and reliable utility service" for customers.

There's enough power supply in this region that it's often less expensive to buy, Content said.

Return to Top

Gas/LNG/Oil Pipelines

S&P Global Platts
June 13, 2019

FERC to conduct EIS for Louisiana gas transmission line project

By Jim Magill

The Federal Energy Regulatory Commission said Wednesday it will launch an environmental review of a project to construct a 170-mile natural gas pipeline connecting northern Louisiana with the southwestern corner of the state.

FERC staff will prepare an environmental impact statement on Enable Midstream Partners ' Gulf Run Pipeline project, comprising the construction of about 170 miles of gas pipeline, two compressor stations and ancillary facilities extending from Westdale, Louisiana , south to two connection points near Starks and Gillis, Louisiana .

According to Enable, the Gulf Run project, which is designed to transport 2,800,000 Dth/d of gas , "would enhance the reliability and diversity of natural gassupply in the Gulf Coast Region and will create a new link between major supply basins and the Louisiana Gulf Coast ."

The project is expected to include construction of about 135 miles of 42-inch-diameter

mainline pipeline and approximately 36 miles of lateral
pipeline. Enable Gas Transmission (EGT), which will operate the line, also plans to implement modifications necessary to allow bi-directional flow on its existing Line CP and to sell the line to its affiliate, Enable Gulf Run Transmission.

FERC said the main line will extend from a receipt point at an interconnect with the existing Line CP at the existing Westdale Compressor Station to delivery points at interconnects with the existing Golden Pass Pipeline and Transco Pipeline near Starks.

The Gillis Lateral will comprise a 36-inch-diameter lateral pipeline extending from the proposed Gulf Run CS #2 near DeRidder, to interconnects with multiple existing interstate pipelines including Cheniere Creole Trail, Texas Eastern Transmission, Transco and Trunkline Gas Company, near Gillis.

New compressor stations

The project also calls for the construction of two compressor stations, six meter stations — two near Starks and four near Gillis — and ancillary facilities including mainline valves and pig launcher/receiver facilities.

In addition to the new facilities proposed to be constructed, the project developers plan modifications for the existing EGT Line CP system including modifications to three compressor stations — the Westdale Compressor Station; the Vernon Compressor Station near North Hodge in Jackson Parish; and the Alto Compressor Station near Alto in Richland Parish — as well as modifications to four existing meters stations.

FERC will take public comments on the planned EIS and hold two public scoping sessions on the project, in Natchitoches, Louisiana , on June 26 and in DeRidder, Louisiana , on June 27.

Return to Top

S&P Global Platts
June 13, 2019

Mountain Valley sticking to schedule following Southgate setback

By Brianna Jackson, S&P Global Market Intelligence

Mountain Valley Pipeline expected to meet the original in-service date for the MVP Southgate natural gas pipeline expansion in Virginia and North Carolinaeven after the North Carolina Department of Environmental Quality denied the developer's request for a water permit.

"The MVP Southgate project team continues to target an in-service date in late 2020," a Mountain Valley spokesperson in a Thursday email.

"The MVP Southgate project team has worked diligently to provide [the Department of Environmental Quality] with comprehensive and updated information about the proposed route in accordance with federal regulations ," the spokesperson said.

The spokesperson said the project team would resubmit the permit application as directed by the state agency once the Federal Energy Regulatory Commission issues a draft environmental impact statement for the project. FERC has scheduled the release of the environmental document for July.

The agency denied the application because it said the document was incomplete. Mountain Valley submitted the application on November 30, 2018.

Mountain Valley Pipeline proposed the MVP Southgate project, an extension of the main Mountain Valley pipeline project, in April 2018. The extension would serve SCANA utility PSNC Energy. The project would deliver gas from the under-construction Mountain Valley mainline in Pittsylvania County, Virginia ., to new delivery points in Rockingham and Alamance counties in North Carolina . The 70-mile extension and compressor station would carry Marcellus and Utica shale gas to PSNC Energy customers and markets in southern Virginia and central North Carolina .

Mountain Valley asked FERC for authorization in time to meet an in-service date of November 1, 2020, as part of its agreement with PSNC.

In the FERC review, Mountain Valley has faced protests from North Carolina agencies over rates and public need for the project and from environmental groups over public need and environmental impacts. The developer defended the project in a January 8 motion, saying it was not overbuilding gastransportation infrastructure. The main 2-Bcf/d Mountain Valley pipeline project has been hit with legal challenges that have slowed construction progress.

The project would be operated by EQM Midstream Partners. Mountain Valley is a joint venture of EQM Midstream, NextEra Energy , Consolidated Edison , RGC Resources and WGL Holdings.

Return to Top

The Energy Daily
June 14, 2019

North Carolina nixes water permit for Mountain Valley pipe extension

Joining several other Democratic-led states that have taken similar actions against gas pipelines, regulators in North Carolina last week denied a Clean Water Act Section 401 permit for EQM Midstream's Southgate extension of its Mountain Valley pipeline, which is currently stalled amid protracted litigation in West Virginia and Virginia.

The North Carolina Department of Environmental Quality (DEQ) under Gov. Roy Cooper (D) notified EQM in a June 3 letter that its application for the Section 401 permit had been denied due to lack of information. However, DEQ said the company could re-apply once the Federal Energy Regulatory Commission had completed its draft environmental review of the project and identified a preferred route.

With the action, North Carolina joins New York, New Jersey and Oregon in denying Section 401 permits for proposed gas pipelines or export terminals in recent months.

In response to oil and gas industry requests, the Trump administration is seeking to limit states' authority to deny the permits as part of its "energy dominance" agenda, but it may have little room to maneuver given the CWA's clear language giving states authority on CWA permitting.

DEQ indicated in November 2018 it was opposed to the Southgate project, which would extend the Mountain Valley pipeline to carry 375,000 dekatherms per day of Marcellus shale gas from the current proposed endpoint in Virginia another 75 miles into North Carolina. DEQ said at the time the pipeline capacity was not needed to serve gas users in the area and urged FERC to conduct an in-depth public need analysis as part of its certification process.

Cooper has come under heavy pressure from environmental groups to block gas infrastructure as part of his stated support for renewable energy and greenhouse gas reduction targets.

Return to Top

Virginiamercury.com
June 12, 2019

‘They care about corporations:’ Landowners demonstrate pipeline project’s toll

By Mason Adams

WIRTZ — Little Creek ran chocolate-milkshake brown, surging with flood water as it splashed over its banks just feet from where lengths of the Mountain Valley Pipeline lay mounted on wooden blocks and submerged in ditches.

Two dozen people trudged through the mud and muck, surveying what was once a key pasture for Four Corners Farm, now gashed and treeless in anticipation of the pipeline.

“We’re walking along an open trench with a huge pipe that’s been sitting in it for about 10 months that is eroding away slowly as the trench is getting deeper and wider,” said Carolyn Reilly, one of the owners of the farm, during a tour last weekend. “This was the lowest and flattest part of our 58-acre farm, and right now a quarter mile of it has been trenched and plowed through by the MVP.”

Carolyn and her husband, Ian, along with David and Betty Werner, moved to the Franklin County farm from Florida in 2010. They began raising chickens, cattle and pigs with restorative practices — rotational grazing and no pesticides or fertilizer, among other techniques.

Three years later came the announcement: A 303-mile transmission pipeline project was planned to move natural gas from Marcellus and Utica shale formations of northern West Virginia across the Appalachian mountains to Pittsylvania County. After a few adjustments, the final route crossed Four Corners Farm. The pipeline, owned by EQM Midstream Partners and a consortium of natural gas transportation companies, was given the green light for construction by the Federal Energy Regulatory Commission in 2017.

MVP did not respond to request for comment and a list of questions emailed to its spokesperson this week.

Fighting the MVP in court and on the land

Four Corners Farm is emblematic of the struggles of landowners along the pipeline route.

First, the Reillys and Werners fought the pipeline in court, but were among the owners of some 300 properties who saw portions of their land awarded to MVP using a version of eminent domain in which the land is condemned and transferred before a price is set. The family’s lawyer, Joe Sherman of Norfolk, said a jury will decide how much money the family will receive in a case currently scheduled for May of 2020.

Second, the family confronted pipeline workers on their land. Ian Reilly described holding his ground, standing on a fence line while a pipeline surveyor walked right up to the edge of the land and asked him to back up. The family didn’t go up into trees like Theresa “Red” Terry and Minor Terry, a mother and daughter who sat took to perches above the ground for days on end in the MVP right of way across their land in Bent Mountain, but they did allow others to do so. Carolyn used Facebook Live videos to capture confrontations with pipeline crews, and MVP later showed a video in court of Ian standing near crews cutting trees. The Reillys were fined $1,000 each for supporting the civil disobedience.

Third, the pipeline disrupted the family's life and business. In interviews, the Reillys and Werners described the loss of a landscape closely tied to their personal and family histories. They carry memories tied to this stretch of former pasture. Ian Reilly gestured to the remnants of a wooded peninsula near the convergence of Teels and Little creeks and the pipeline right of way, where his children had built a fort that became one of their favorite spots to play. The earth-moving that came with the pipeline, as well as the erosion and flooding that followed, have nearly eradicated the site, but not the memories.

A set of hoop houses were visible above the right of way, but the livestock now are gone, too. The Four Corners Farm owners had been considering obtaining organic certification by the U.S. Department of Agriculture, but the pipeline's decimation of its best pasture, along with MVP's use of chemical pipe coatings and fertilizer, destroyed those plans. The Reillys relocated to another county, while the Werners remain up the road, regularly monitoring pipeline construction activity and watching for regulatory violations.

"After the invasion last year of starting construction so abruptly, we had to make a really difficult decision. We decided to cease our farming operations, out of a lot of different concerns," Carolyn Reilly said. "We all need water to drink and live, and for raising animals, and we were worried about contamination to our aquifer.

"Another concern was the influx of so much noise and construction, and the effect that that has on the hormone and stress systems of animals. And it affected us. So once we were finished with our farming season last year, we left because (of) the stress and the noise, and because our livelihood was gone."

Flooding and erosion

Four Corners is downstream from the pipeline's steep descent from the Blue Ridge Plateau, which has compounded erosion and sediment runoff. The Mountain Valley Pipeline has struggled with erosion and sediment issues throughout its construction over the past year and a half.

According to a lawsuit filed by Virginia Attorney General Mark Herring, the Virginia Department of Environmental Quality and a state contractor recorded more than 300 violations of erosion, sediment control and stormwater regulations on the MVP between June and November of 2018. Herring spokesman Michael Kelly deferred questions about MVP and Four Corners Farm to the DEQ.

On the day the Reillys and Werners invited friends, supporters, and the media to visit their former farm, western Franklin County was placed under a flood warning and I had to find another route to their land after turning around on Callaway Road because it was flooded.

The flooding came a little more than a year after runoff from pipeline construction resulted in a mudslide on Cahas Mountain Road, located up the Blue Ridge Plateau from Four Corners Farm. That incident resulted in the only pipeline work stoppage to date, which was informally agreed to by MVP and DEQ and which lasted a little more than a week. The DEQ has not used the expansion of its stop work authority it was granted by the General Assembly in 2019.

Next week, the State Water Control Board is scheduled to convene an advisory board meeting to merge the state's erosion and sediment control program with its stormwater management program.

The quarter mile of right of way through Four Corners Farm isn't nearly as steep as stretches higher in the mountains, but it sits amid two waterways, Teels Creek and Little Creek, with smaller wetland areas along the way. The crossing of Teels Creek is another snag: the U.S. Army Corps of Engineers' 404 permit approvals are currently suspended due to problems

related to conditions on crossings in West Virginia.

Exposed pipe, dead grass

The Reillys and Werners pointed to what they say are other construction lapses. Even in June, with the surrounding countryside a bright green, the grass cover on the pipeline right of way coming down a slope onto the farm property looked dark brown.

“That grass is just dead,” Carolyn Reilly said. “It can’t even grow because the soil is so compacted. That’s their seed.”

DEQ spokeswoman Ann Regn wrote that it might be nurse grass, a temporary species used to transition the site to a required native mix.

Carolyn’s mother, Betty Werner, used a walking stick to indicate a piece of pipeline that had been chipped, exposing an inner layer. After initially spotting it, she alerted regulators, and the workers installing it had subsequently drawn a black circle around it.

Lengths of pipe — some welded together and others not — sat exposed to the rain and sun, some for many months, Betty Werner said. Others lay immersed in brown water in flooded trenches.

Timber mats stretched across parts of the right of way, but were inundated with mud and water. A bridge stretched across Little Creek, but the swollen waterway was touching it. Werner indicated a spot downstream where pieces of a previous bridge had washed downstream the year before, during flooding by Hurricane Michael.

Werner pointed her stick toward a spot where last year she noted the right of way was located 36 feet from the creek — closer than the 50 feet required by DEQ. That distance has diminished with erosion to just 29 feet, she said. Werner said she complained to DEQ, which required MVP to better stabilize the area.

“It was rutted, deep trenches, and no grass,” Werner said. The company dropped pellets for replanting grass, “but very little of them came up, except in clumps.” She said workers were back on site hand-planting grass and laying straw a few days ahead of the Reillys media event.

Regn, the DEQ spokeswoman, said “DEQ’s certified erosion and sediment control inspectors have been, and will continue to be, on site (two inspectors per spread, 8-10 hours per day) to ensure appropriate control measures are in place, installed properly and maintained.”

A letter from MVP to DEQ Director David Paylor listed concerns at Four Corners Farm and the Dale Angle Farm, also in Franklin County, including some of those observed in the right of way: standing water in trenches, streambank scour, perimeter controls overtopping during high flow and stabilization measures. MVP committed to return the areas “to pre-construction contours and conditions,” to install additional controls, and to implement more soil stabilization measures.

“Mountain Valley takes these concerns very seriously and is committed to completing the project in a manner that protects the land and natural resources crossed by and adjacent to the project,” reads the letter, which was signed by Robert Cooper of Equitrans Midstream Corporation.

‘It’s all about money’

On the bridge over Little Creek stood Theresa “Red” Terry and her husband, Coles, who have been fighting MVP on their Bent Mountain property. Although trees have been cut on the Terrys’ property, pipeline crews haven’t yet cleared the land in the right of way. Their family has lived on that land for six generations. Coles didn’t grow up in the house he now lives in,

but his father and grandfather both did.

“The people, the agencies and the organizations that are supposed to be out there to protect us don’t really care about us,” Coles said. “They care about corporations. Corporations have more rights than individual people do. And it’s all about the bottom line. It’s all about money.”

I asked Red Terry about seeing the pipeline cut at Four Corners Farm after her own experience in the trees.

“It makes me feel suicidal,” she responded.

“I look at what they’re gonna do to my land (what) they did to this beautiful land. When they took down my trees while I was up in the tree, it was probably the worst day of my life. It feels like they’ve taken one of my children and they’re raping them and beating them and mutilating them while I’m watching, because the land up there is like our child. We have watched over that land for his family. Six generations. I just feel like all the people that have been put in place for our protection have been bought off.”

When your land is being taken against your will for a pipeline that runs within a few hundred feet of your house, how do you live with it, I asked. How do you sit in a tree for 34 days but still keep going a year after you’ve come down?

“I don’t,” Terry said. “I don’t. I wake up in the middle of the night in sweats. Just my heart pounding. I have been to the doctor about it, and he’s told me it’s panic and anxiety attacks.”

She described her biggest fear: that the pipeline explodes when she’s away, killing the rest of her family and leaving her alone. While comparatively rare, explosions happen. A newly installed gas line in West Virginia exploded last June after a landslide. A few months later, the same happened in western Pennsylvania. When Terry described that scenario, her face started to crack and she held back tears.

During the tour, children played among the group of families and activists, running through mud puddles, climbing piles of dirt, shouting through lengths of pipe and laughing at the echos. Amid the flurry of youthful activity, Carolyn Reilly couldn’t help but laugh.

“Of course, children find a way to find beauty in everything,” Reilly said. “Despite all this, we have found new ways of experiencing joy through how the children can be amid such devastation. That teaches us as adults and parents that there still is joy to be had and experienced in life, even with something like this.”

Return to Top

S&P Global Platts
June 13, 2019

Cheniere plans to put big part of Midship pipeline in service in October

By Corey Paul Market Intelligence

A large piece of Cheniere Energy Inc.'s roughly $1 billion Midship Pipeline Co. LLC project under construction in Oklahoma could go into service as soon as October, according to filings with the Federal Energy Regulatory Commission.

Plans call for the Midship pipeline to ultimately provide about 1.4 Bcf/d of firm natural gas transportation capacity from the SCOOP and STACK plays in Oklahoma to supply Gulf Coast and Southeast markets, including Cheniere's Sabine Pass and Corpus Christi LNG terminals in

Louisiana and Texas. The project includes the construction of 200 miles of 36-inch mainline in Oklahoma, along with laterals, three compressor stations and other related facilities. Midship Pipeline, jointly owned by Cheniere and EIG Global Energy Partners, received a final notice to proceed with construction from FERC in February, and the developer targeted an in-service date by the end of 2019.

But in early May, the developer asked FERC to approve a proposed interim recourse rate of $0.4385/Dth to accommodate plans to bring the pipeline into partial service early to meet customer demands while the developer continues to work to fully commercialize the project. The developer plans to build all of the facilities approved by FERC except for one compressor unit at each of the compressor stations in the towns of Calumet, Tatums and Bennington in Oklahoma.

That would allow the pipeline to begin shipping about 1.1 Bcf/d to meet firm transportation service obligations of about 925 MMcf/d, according to a May 1 filing. The developer would build the remaining compressor units once the project is further commercialized.

The plan advanced June 11, when FERC staff found that the interim transportation service would not change any of the environmental impacts weighed by FERC when it considered the project. FERC originally approved the project in August 2018. The project was amended to include a minor reroute in January.

Midship has secured commitments from Cheniere, Devon Energy Corp., Marathon Oil Corp. and Gulfport Energy Corp. subsidiaries or affiliates.

Cheniere executives told investors on a May 9 earnings call that it continues to explore pipeline opportunities but has no immediate plans to build or operate a pipe connecting the Permian Basin, where there is a glut of gas, to LNG demand centers.

"When there are 20 other people trying to do it, we'll just focus on our core business, which is liquefaction," Cheniere CFO and Executive Vice President Michael Wortley said at the time. "I mean, Midship was a unique opportunity and is a great project and is well underway, but we didn't see that same kind of opportunity coming out of Permian. We make a build or buy decision on all these things. And right now, it's much easier for us to just contract with the Kinders of the world, who do a fine job on that," referring to Kinder Morgan Inc. and other pipeline companies. (FERC docket CP17-458)

Return to Top

S&P Global Platts
June 13, 2019

Corpus Christi LNG Train 2 begins LNG production

By Corey Paul, S&P Global Market Intelligence
The second liquefaction train of Cheniere Energy's Corpus Christi LNG export facility in Texas started producing LNG on Thursday, bringing the company closer to its target of entering the production unit into commercial service in the coming months.

"Train 2 at our Corpus Christi facility started producing liquefied natural gas , achieving another milestone in this process," a Cheniere spokesperson said in an email. "We estimate substantial completion of Train 2 ahead of schedule."

The second train at Corpus Christi became the seventh liquefaction unit to go operational between Cheniere 's two export facilities in Louisiana and Texas . The second Corpus Christi train is part of a significant expansion for Cheniere , which is already the biggest LNG exporter in the US and a top consumer of US natural gas .

Each of the trains at Cheniere 's two terminals has the capacity to produce 4.5 million metric tons per year of LNG , or about 0.7 Bcf/d of gas .

The first train at Corpus Christi LNG and the fifth train at Cheniere 's flagship facility in Sabine Pass , Louisiana , were cleared by the Federal Energy Regulatory Commission in March to enter commercial service. The first commercial deliveries from the new Cheniere units were expected in June and August, respectively.

On June 3, Cheniere announced a decision to commercially sanction a sixth train at Sabine Pass .

A third train is under construction at Corpus Christi. In a Tuesday FERC filing, the company affirmed the project is on schedule to come online in 2021. The purpose of that filing was to request an extension of time attached to a 2014 FERC order authorizing the Corpus Christi project, which had required the liquefaction units to be available for service within five years of the order. But Cheniere did not take a final investment decision on the third train until May 2018, and it requested an extension until December 2021.

Cheniere is also working to commercialize another project, the Stage 3 expansion, at Corpus Christi. The company expected to reach a final investment decision as soon as 2020. The project involves the construction of up to seven midscale liquefaction trains, which could produce a total of about 9.5 mt/year of LNG . Cheniere recently announced a gas supply agreement with Apache that both supported the expansion and marked a new way of commercializing an export project for Cheniere .
Return to Top

Congress

The Patriot Ledger
June 13, 2019

Rep. Lynch urges state to hit reset on compressor project

By Jessica Trufant

U.S. Rep. Stephen Lynch is urging a state Department of Environmental Protection adjudicator to revoke approval for a controversial natural gas compressor station in Weymouth and restart the permitting process, calling the department’s handling of new data from the site

“egregious.”

Lynch, a longtime opponent of the project who is bringing federal regulators to Weymouth on Monday for a public listening session, wrote on Wednesday to the hearing officer overseeing an ongoing appeal case. In the letter, Lynch asks that energy giant Enbridge be required to submit an updated application since regulators at the Department of Environmental Protection admitted they did not have all the data they sought during an air-quality permitting process.

“The recent discovery that the DEP failed to provide sufficient data regarding the presence of 64 potential toxins in the area of the proposed Weymouth compressor station has destroyed the public trust in the air-quality permit process,” Lynch said in a statement on Thursday. “To restore the public trust and regain their integrity as an agency, I believe the DEP must reject the plan approval for the proposed site and require the proponent to restart the process and examine the serious threat to the public health and ensure that this time nothing is overlooked, or worse, intentionally concealed.”

Despite knowing for weeks that air-quality test results only contained scans for 40 toxins rather than the 64 they had requested, Department of Environmental Protection officials only notified parties in an appeal case challenging the permit of the updated data the day before proceedings were about to end in May. That revelation upended the process, prompting hearing officer Jane Rothchild to threaten sanctions and extend the hearing into June to allow those involved enough time to review the 700-plus pages of new test results.

Lynch’s statement came days before a field hearing that the South Boston Democrat requested in a January letter to Howard “Skip” Elliott, administrator of the Pipeline and Hazardous Materials Safety Administration. The administration will host the hearing from 6 to 8 p.m. Monday at Abigail Adams Middle School, 89 Middle St. in Weymouth. The hearing was previously scheduled to start at 7 p.m., but was moved up because the Weymouth Town Council and the Quincy City Council both have meetings that night.

“The (Pipeline and Hazardous Materials Safety Administration) has arranged for regional staff members who are fully qualified and familiar with the area to attend and answer any questions the public may have about the proposed compressor station,” Lynch’s office said in a statement. “This will be an opportunity to raise the significant and documented concerns of health experts, citizens groups and residents of the surrounding residential neighborhoods.”

Mike Lang, the environmental coordinator of the East Braintree Civic Association, said he has concerns about the safety of the newly built Fore River Bridge, which carries Route 3A over the Fore River between Quincy and Weymouth. The compressor station would be next to the bridge.

Lang said a high-pressure pipeline already runs under the completed bridg, and beside the bridge supports, even though documents from the permitting for the new bridge state that the existing gas infrastructure is northeast of the bridge and “does not extend toward the bridge site.”

Lang said he notified the Pipeline and Hazardous Materials Safety Administration, which said it was a siting issue and under the purview of the Federal Energy Regulatory Commission, but the commission said it’s a safety issue, not siting.

Lang said the gas metering station is also next to the bridge and a gasoline tanker shipping channel, and the station vents gas to the commuter traffic above.

“It’s a really bad location, and there seems to be no oversight or concern regarding what happens with these projects,” Lang said.

The proposed compressor station project has drawn strong local opposition from officials and residents who said the plant would vent pollution and toxic gases and that it could explode in the densely populated neighborhood.

Spectra Energy-Enbridge received initial approval for the compressor station from the Federal Energy Regulatory Commission in January 2017, but the company still needs several state permits.

The state issued an air-quality permit on Jan. 11, a week after the Metropolitan Area Planning Council released a health-impact assessment that found the compressor station would be unlikely to affect health and noise in the area. An appeal of that air permit is underway. The deadline for a decision on that appeal has been pushed back from June 28 to July 12 to allow Rothchild to review extensive cross-examination and hundreds of pages of new data and testimony.

Lynch on Thursday asked Rothchild to require Enbridge to submit an updated air-quality application after regulators admitted they did not have all the data they sought during the air-quality permitting process.

The state also issued wetlands and waterways permits, which are under appeal. The state Office of Coastal Zone Management must decide whether the project is consistent with the federal Coastal Zone Management Act, but not until the project has first obtained the waterways permit.

In his letter to Elliott in January, Lynch said the natural gas explosions in the Merrimack Valley that affected about 8,600 homes and businesses this past September, destroying as many as 80 buildings and causing one death, had underscored “the grave threat to public safety” created by natural gas pipelines built close to residential areas.

Lynch said the Merrimack Valley explosions were not part of an isolated incident, noting that about 650 pipeline incidents were reported across the country in 2017, resulting in 20 deaths and 35 people injured.

Lynch was recently appointed to the House Subcommittee on Railroads, Pipelines and Hazardous Materials.

Material from State House News Service was included in this report.

Return to Top

S&P Global Platts
June 13, 2019

House draft bill would phase out long-standing pipe risk analysis method

By Allison Good, S&P Global Market Intelligence

Federal lawmakers want the national pipeline safety regulator to make operators do more involved inspections to evaluate safety risks and may require new rules to be written as part of a proposal for the agency's upcoming reauthorization.

According to draft language in the Safer Pipelines Act of 2019 that the US House of Representatives' Energy and Commerce Subcommittee will discuss June 19, the US Pipeline and Hazardous Materials Safety Administration , or PHMSA, would be required to develop and implement a plan to get rid of so-called direct assessment as a risk

analysis method. Direct assessment typically involves excavating pipeline infrastructure to do physical inspections and nondestructive testing of a pipe's surface to check for corrosion or other issues.

PHMSA would have six months to come up with a plan for phasing out direct assessment over the next two years, the draft bill said.

Shifting the standard away from direct assessment on pipeline surfaces and in the surrounding soil and water would leave operators with tools such as pressure tests, which are intended to determine if a pipe can withstand appropriately high pressures, or in-line inspection devices that collect data about a pipeline 's interior and use algorithms to analyze anomalies such as cracking and corrosion. Pipeline operators have long noted that these methods are often considered more intrusive and disruptive to the pipeline 's operations, and in-line inspections are not always possible with the configuration of certain pipes.

The draft legislation would also abolish a $2 million ceiling on civil penalties for infractions such as unlawful excavation, demolition and construction and failure to report damage. The draft also proposed to increase civil penalties for LNG facility operators that have not met minimum safety standards or other violations from $50,000 to $200,000 per violation and raise the penalty for punishing an employee whistleblower from $1,000 to $200,000.

Lawmakers also specified that operators of hazardous liquid pipeline assets in areas where releases could have greater consequences for health, safety and the environment install automatic spill detection and shut-off valves for their pipeline infrastructure.

The draft bill is part of a periodic congressional assessment that PHMSA undergoes, in which the agency's role as the nation's pipeline safety regulator comes up for periodic congressional review. Congress often takes that opportunity to mandate rule updates.

PHMSA itself on June 3 sent Congress a proposal for the agency's reauthorization. Among other things, that proposal includes requiring gas distribution pipeline operators, mainly utilities, to install backup equipment to prevent high-pressure gas from flowing into low-pressure lines. The agency's proposal did not include elements related to direct assessment or civil penalty increases.

The House's discussion draft did not include specifications related to low-pressure systems. However, Senator Edward Markey, Democrat-Massachusetts , has separately proposed legislation in light of a deadly 2018 gas disaster in his state. That series of explosions and fires has been tied to overpressurization on a low-pressure system.

Markey's bill would raise the per-violation civil penalty for certain infractions from $200,000 to $2 million, and where the Safer Pipelines Act of 2019 proposal would eliminate the maximum penalty cap, Markey's bill would set a $200 million cap. The bill would also include a provision for annually raising the penalties in line with inflation. The bill would also add stricter rules for planning, construction and maintenance.

Return to Top

S&P Global Platts
June 13, 2019

US House bill could extend wind production tax credit, expand storage incentive

By Molly Christian, S&P Global Market Intelligence

The head of the US House of Representatives' tax-writing panel may propose to prolong a federal wind energy production tax credit that is set to expire in 2020 and expand an investment credit for energy storage projects as part of an upcoming tax extenders package.

But the bill is not complete and faces a high chance of opposition in the US Senate. "Nothing has been finalized in terms of what will or won't be in the package," said Erin Hatch, a spokesperson for the House Committee on Ways and Means.

On May 12, Bloomberg Government reported that the committee's chairman, US Rep. Richard Neal, D-Massachusetts , will likely include an extension of the wind energy credit in a pending extenders package. Neal also said he was optimistic on including an extension of the federal investment tax credit for utility-scale solar power . Hatch confirmed Neal's comments to S&P Global Market Intelligence but did not have information on when the Ways and Means Committee would release the bill.

In late 2015, the US Congress reached a bipartisan deal to extend the wind production credit by five years to projects that start construction by Jan. 1, 2020, and to phase down the investment tax credit for solar projects until it reaches 10% from 2022 onward. But Democrats, who regained control of the House in the November 2018 midterm elections, have said the Trump administration's efforts to roll back environmental regulations and withdraw the U.S. from the Paris Agreement on climate change have fundamentally altered the market for renewable power, thereby changing the conditions under which Congress reached the 2015 tax deal.

Storage

In addition to possibly prolonging the federal wind and solar energy credits, the House's upcoming extenders package may expand incentives for energy storage projects, one industry source said. Lawmakers in the House and Senate have introduced companion legislation that would enable nearly all stand-alone battery or other storage projects, including those paired with wind power , to qualify for a 30% investment tax credit that would decline over time. Currently, only storage projects paired with solar power can qualify for the credit.

Even if Neal attaches the energy tax provisions in his upcoming bill, the legislation may not go far. As part of the bill, Neal is expected to propose clawing back some of the corporate and estate tax cuts that President Donald Trump signed in late 2017, a move Republicans in the GOP-majority Senate will almost certainly oppose. In addition, U.S. Sen. Chuck Grassley, R-Iowa , who heads the Senate Committee on Finance, has said he will not push for another extension to the wind credit after agreeing in 2015 to phase out the incentive, and the Senate committee left out those extensions in its own bipartisan extenders bill introduced in February.

Return to Top

The Energy Daily
June 14, 2019

GOP leaders push back on reports Dems want PTC, ITC extension

BY ERIC LINDEMAN

Senior Republicans on the House and Senate tax-writing committees warned Democrats Thursday against proceeding with legislation to extend tax credits following media reports that

the Democratic chairman of the House Ways and Means Committee wants to include incentives for the wind and solar industries that are scheduled to expire or start declining in value next year.

Rep. Kevin Brady (Texas), ranking Republican on the House Ways and Means Committee, and Sen. Chuck Grassley (R-Iowa), chairman of the Senate Finance Committee, spoke out after media reports circulated that House Democrats were considering legislation to provide a three-year extension of the renewable energy production tax credit (PTC)—a crucial subsidy for the wind industry—and the investment tax credit (ITC), which has been vital to the solar industry's red-hot growth.

Ways and Means Chairman Richard Neal (D-Mass.) said following Tuesday discussions with colleagues on the Democratic-controlled committee that he will introduce legislation next week to extend the PTC and ITC for up to three years, according to media reports.

The PTC is currently scheduled to expire at the end of this year, and the ITC starts declining in value at that time.

While Grassley has been a strong supporter of the PTC due to the wind energy boom in his home state, he and Brady appear to be reacting to reports that House Democrats plan to offset the cost of their so-called "tax extenders" bill by raising the corporate tax rate by 1 percent—slightly rolling back the tax cut granted by the recent GOP tax reform bill.

"If press reports are true, this proposal is a non-starter," the GOP leaders said. "Raising taxes on American families and businesses would throw a wrench in this historically strong economy and destroy an untold number of jobs across the country.

"We hope that House Democrats instead choose to work with us to end business-as-usual as it concerns these temporary tax provisions and not use these provisions as leverage in unrelated tax policy disagreements. It's simply not fair to the millions of American taxpayers who have waited long enough for Congress to address expired and expiring tax policies."

The Democratic spokesman for the House Ways and Means Committee did not respond to requests for comment Thursday.

House Democrats' reported interest in extending the PTC and ITC may jeopardize bipartisan efforts to provide a tax credit for energy storage, which is widely supported as a needed technology to integrate more intermittent renewables on the grid. House Dems were expected to include that proposal in their tax extenders bill.

Also in jeopardy are extensions of tax credits for the biofuel industry, which Wednesday issued a statement thanking Neal for backing legislation for a three-year extension.

GOP critics of the PTC and the ITC say subsidies are no longer needed by some mature renewables, such as onshore wind farms and solar. They also say such credits for renewables distort wholesale power markets and give wind and solar an unfair advantage over conventional generators, such as coal, nuclear and natural gas-fired plants.

While passing a tax extenders bill in the Democratic-controlled House is possible with a party-line vote, the GOP-controlled Senate is another matter, and would require some sort of trade-off deal with Republicans.

But one Capitol Hill source told The Energy DailyThursday that not only is there no bipartisan deal on tax extenders on the horizon, any such bill is unlikely to move before the fall in any event.

"This is an early salvo," the source said. "I don't think there's been a lot of talk between

House Democrats and Senate Republicans. It's not clear where this is going or what's going to be included."

Although both the PTC and ITC are being phased out under bipartisan legislation passed in December 2015, how the phase-out applies to a particular project under IRS rules depends on when construction began and whether the developer has demonstrated continuous progress in construction or invested at least 5 percent of the total cost of the project.

The PTC has been in place since 1992 and was initially set to expire in 1999.

The ITC for utility-scale solar drops to 26 percent in 2020, 22 percent in 2021, and then to a permanent 10 percent starting at the end of 2022.

In June, the Internal Revenue Service issued an inflation adjustment to the PTC increasing it from 2.4 cents per kilowatt-hour to 2.5 cents; the 30-percent ITC used by the solar industry is applied to the total costs of a project and therefore does not have a comparable inflation adjustment since it is calculated from the project's tax basis and not power sales.

Return to Top

Other Agencies

ClimateWire
June 14, 2019
EPA

Here comes the carbon rule. What to know

Jean Chemnick, E&E News reporter

EPA is expected to finalize its power plant carbon rule next week, according to multiple sources, completing the two-year process of replacing an Obama-era regulation with a more industry-friendly substitute.

When the final Affordable Clean Energy, or ACE, rule is released, observers expect a few substantive changes compared with last year's proposal. But the final rule is expected to retain the same focus on individual power plants — rather than calling for big shifts in the power sector writ large.

Industry celebrated the proposal as being cost-effective. But environmentalists and past regulators say EPA is doing too little to curb emissions from the second-largest emitting sector in the United States.

"Look, this is an EPA, this is an administration that does not want to do anything about climate change," said Joseph Goffman, EPA's top lawyer for the Office of Air and Radiation during the Obama administration. "If at the end of the day there's only a relatively modest investment in CO2 efficiency, I think that outcome would be totally consistent with the administration's policy goals."

Why is the Trump administration issuing a carbon rule?

President Trump campaigned in 2016 on repealing the Obama-era Clean Power Plan, which eyed emissions cuts across the broad power sector. At one campaign event in Huntsville, Ala., Trump pledged to make his predecessor's signature climate rule "boom, gone."

But after Trump took office in 2017, EPA opted — with industry's support — to draft a

replacement rather than undertaking the complex and legally fraught task of undoing EPA's 2009 endangerment finding for greenhouse gases, which obligates it to regulate them under the Clean Air Act (Climatewire, Oct. 12, 2017).

"Once senior Trump officials decided not to reverse the endangerment finding, they recognized that it was only a matter of time before EPA would be forced to regulate CO2 emissions from the power sector," said Bracewell LLP energy lobbyist Jeff Holmstead. "Rather than waiting to be sued, they decided to develop a rule that would clearly establish the limits of what EPA can do under the Clean Air Act."

What is ACE?

EPA released ACE last August to praise from conservatives and coal-invested utilities. The proposed rule differs from its Obama-era predecessor in both structure and stringency.

The 2015 Clean Power Plan set emissions reduction goals for states based on their power plant mixes. States that relied more on coal-fired power plants were allowed to emit more on average, but they were nonetheless given targets that would have forced their fleets to move away from unabated coal generation.

President Obama's plan assumed that utilities could cut their emissions through on-site efficiency improvements, switching from coal to gas and bringing more renewable energy online. EPA used those three "building blocks" to set state targets.

But Trump's EPA rejected this "systemwide approach," arguing it was illegal. The ACE proposal asked states only to consider opportunities for heat-rate improvements at individual power plants.

So, unlike the Clean Power Plan, ACE doesn't compel average emissions reductions across the sector as a whole. It amounts to a carbon intensity standard for coal-fired plants.

What to look for in the final rule

The final rule, which is being reviewed by the White House's Office of Management and Budget, is unlikely to change any of that.

But EPA is expected to cut language that would have revamped the way energy efficiency improvements to power plants trigger Clean Air Act permitting requirements for smog and soot (Greenwire, June 10).

ACE proposed letting states look at hourly — rather than annual — increases in emissions. While the change was intended to shield industry from "onerous" and "costly" New Source Review permitting requirements, industry groups expressed concern that it would have the unintended effect of triggering NSR even more often.

And experts said EPA likely feared the NSR provision would be particularly vulnerable to challenge — perhaps putting the whole ACE rule on shakier legal footing.

Goffman said it would have been difficult for EPA to defend a rule exempting sources from Clean Air Act regulations for one set of pollutants in exchange for compliance with regulations for another set.

"The Clean Air Act does not frankly tolerate trade-offs between and among pollutants," Goffman said. He added that Justice Department lawyers likely had a hand in the change.

While the proposal wouldn't let states offer their utilities exemptions from NSR permitting, it may have in effect allowed them to exempt coal plants from the efficiency improvements that trigger NSR.

"Issuing the smog and soot rollbacks jointly with the CO2 rollbacks would make the overall pollution increases from ACE even clearer, exposing EPA to even greater legal risk," said John Walke, director of the Clean Air, Climate and Clean Energy Program at the Natural Resources Defense Council.

EPA air chief Bill Wehrum has long championed reforms to the permitting program, and EPA Administrator Andrew Wheeler has suggested the agency might still move a separate, broad NSR overhaul as soon as this fall.

"In general, I believe it make sense to treat NSR reforms globally rather than picking out individual sectors and attacking it piecemeal," said Thomas Lorenzen, a partner at Crowell & Moring LLP who represents industry clients.

EPA is also expected to make changes to the rule's regulatory impact analysis, which lays out its projected costs and benefits. The New York Times first reported last year on the proposal's estimate that swapping the Obama rule for ACE would result in 1,400 additional premature deaths annually by 2030 because of increased fine particulate matter (PM2.5) pollution from more coal-fired generation.

EPA is expected to try to obscure that finding, perhaps by measuring the rule's health impacts against a pre-Clean Power Plan emissions baseline that would show less of a difference (Greenwire, Aug. 29, 2018).

The agency could also change the way it counts co-benefits — the incidental benefits of cutting pollutants like PM2.5 that affect human health directly — to avoid uncomfortable headlines. One way to do this would be to ignore health impacts below the threshold at which fine particles are now regulated.

The final rule might reference different models with different assumptions and results in a bid to distract from the true impact of rulemaking, said John Bachmann, EPA's former associate director for science policy and new programs.

But Bachmann predicted that career staff at the agency would make sure the data would all still be there.

"They're just told by management, 'Here's what we're telling you you've got to do, and you've got to analyze it,'" he said. "But there's only so far they will go."

What happens next?

As proposed, ACE would give states three years to complete their implementation plans. The proposal gave them a menu of technologies to require of their coal plants — things like boiler feed pumps and air heater and duct leakage control devices. EPA would approve those plans.

Meanwhile, environmental groups are likely to mount legal challenges at every step.

"One of the big challenges here will remain how to get this through the courts successfully before the conclusion of President Trump's first term," Lorenzen said. "If the litigation carries over into a future administration, we could well see a repeat of what we saw with the Clean Power Plan."

The U.S. Court of Appeals for the District of Columbia Circuit, which was overseeing the multitudes of lawsuits filed over the Clean Power Plan, halted litigation when the Trump administration took office. The Obama rule itself remains stayed by the Supreme Court; justices voted 5-4 in February 2016 to stop the rule from going into effect.

A future Democratic administration could scrap the ACE rule for something more ambitious, Lorenzen noted, "perhaps even more aggressive than the Clean Power Plan."

Holmstead said the rule's fate could rest on whether Trump is reelected.

"[B]ut a new administration won't be able to resurrect the Clean Power Plan or anything like it," he said, pointing to the five conservative justices on the Supreme Court. "I doubt that a new administration would go through all the time and effort that would be needed to develop such a rule when they know that would almost certainly be struck down in court."

Twitter: @chemnipot Email: jchemnick@eenews.net

Return to Top

States

S&P Global Platts
June 13, 2019

DRBC OKs permit for New Jersey port that could handle LNG export cargoes

By Jim Magill

The Delaware River Basin Commission approved a project to create a deepwater port at a site on the Delaware River in New Jersey that a developer plans to use for exporting LNG derived from natural gas produced in the Marcellus Shale play.

In a Wednesday vote, the DRBC, comprising the governors of Delaware , New Jersey , Pennsylvania and New York and the division engineer of the US Army Corps of Engineers North Atlantic Division, voted unanimously to approve the permit to dredge the channel and build a dock at the Gibbstown Logistics Center, which is owned by Delaware River Partners.

New Fortress Energy, a public company and a subsidiary of Fortress Investment Group, is “a potential customer of the Gibbstown Logistics Center,” a New Fortress spokesman told S&P Global Platts. Delaware River Partners, the owner of the project , is part of Fortress Transportation and Infrastructure Investors, a company affiliated with New Fortress Energy.

New Fortress has not offered many details about its plans regarding the Gibbstown project . The company, which is building an $800 million liquefaction facility in Bradford County, Pennsylvania , previously said it plans to ship the fuel by rail or truck to an export facility, where it can then be loaded onto oceangoing containerized ships for transportation to nations in the Caribbean .

Environmental groups, which have alleged the DRBC did not provide the public with adequate information about the ultimate use of the Gibbstown project , decried the commission vote.

"The DRBC should have tabled the vote today so that the public and the DRBC can review the project and its impacts to the basin. Instead, the commission rushed it through, disregarding the safety of the public,” Jeff Tittel, director of the New Jersey Sierra Club , said in an email.

Return to Top

International/Misc.

S&P Global
June 13, 2019

Floating regasification plants open overseas markets for LNG producers

By Gene Laverty Market Intelligence
Low-cost floating regasification plants are helping LNG producers penetrate markets in countries that cannot afford more expensive import infrastructure, industry executives said.

The cost and construction time required to build plants that turn supercooled LNG into pipeline-ready natural gas have dropped dramatically in the last decade, said Alfred Sorensen, CEO, president and director of Pieridae Energy Ltd., in a panel discussion at the Global Petroleum Show. The exhibition and conference were held near Pieridae's headquarters in Calgary, Alberta.

"Most regasification used to be land-based and cost about US$1 billion," Sorensen said June 11. "Today we can build a floating regasification facility in six to eight months and have it all installed in less than a year, and it doesn't cost more than US$250 million."

That has helped countries like Pakistan, which had never imported LNG up until five years ago, become major gas consumers, Sorensen said. Imports of LNG have allowed Pakistan to displace diesel and light fuel oil as inputs for power generation, lowering both emissions and power costs.

In countries like Pakistan that used fuel oil-derivatives for power generation "their kilowatt per hour probably had cost around 30 [U.S.] cents to 35 cents," Sorensen said. "Using natural gas, it is probably around 12 to 15 cents. What that means for the country is, instead of having to have the power on for maybe 18 hours a day, they can now have the power on for 24 hours a day."

Pieridae's LNG export project in Nova Scotia is backed by customers in Germany, but it would have capacity that could be used to supply countries where demand is just starting to emerge.

Sorensen and Stefan Vos de Wael of Royal Dutch Shell PLC's Canadian gas unit are involved in the development of LNG export projects on opposite ends of Canada. Vos de Wael, who is general manager of commercial operations for Shell Canada Integrated Gas, agreed that new demand has emerged in India, Pakistan and Southeast Asia in addition to growth in traditional markets like Japan and China. Some of those countries are also seeing increased use of LNG in the marine and highway transportation sectors.

"A lot of customers are in the power sector, but we also see new uses for LNG, like LNG into fuel," Vos de Wael said.

While some ships have switched to LNG fueling ahead of new standards for marine emissions, China and Europe have also been boosting the number of trucks that run on natural gas. "China at the moment has about 300,000 trucks that they're running on LNG. New customers starting to emerge in transport sector," Vos de Wael said.

Shell is leading the LNG Canada Development Inc. project on British Columbia's Northern Coast for a consortium that includes large Asia-based producers and gas sellers. It is the only one of more than a dozen proposed West Coast LNG facilities to advance to the construction stage. Pieridae had its roots in plans for a similar facility in Kitimat, British Columbia, but shifted its focus to Nova Scotia on Canada's East Coast amid regulatory and supply headaches. The biggest hurdle in building an LNG project in Canada is securing long-term customers for the gas, Sorensen said.

"I think when you look at what is happening in British Columbia, one of the primary reasons that you haven't seen a lot of projects come to the finish line is the fact that if you don't have customers, you don't have a project," Sorensen said. "Our project in Nova Scotia began with our relationship with Germany."

The German utilities that are backing much of the development cost of Pieridae's project see Canada as an alternative to piped supplies from Russia or LNG from other sources. The financial support has helped move the Pieridae project forward.

"The reason we can play in the same league as LNG Canada is because we have the support of the German government," Sorensen said. "Taxpayers in Germany are willing to do more than Canadian taxpayers are to develop our resource. That's really indicative of how difficult it is to get a project off the ground here."

Trepidation among European customers about pipeline-supplied gas from North Africa and Russia has prompted some of them to increase LNG use for supply security, Shell's Vos de Wael said. Europe already has infrastructure for gas imports and distribution, which gives it a leg up on regions where the use of imported gas is less common.

Supply concerns have also been a problem for proponents of Canadian LNG facilities, Sorensen said. The nature of North American natural gas markets has created reluctance among Canadian producers to sign long-term contracts, even though the nation has substantial reserves in the prolific Montney and Duvernay shales that straddle the Alberta-British Columbia border. Gas for LNG Canada's project will mostly be sourced from fields owned by project participants, many of which are backed by their governments.

"We've never been able to convince producers to do something for 20 years, and that has been a problem from the very beginning," Sorensen said. "It is a mindset within the community that it's too long a period of time."
Return to Top

From: Celeste Miller on behalf of MediaDL
To: NewsDL
Subject: June 19 news clips
Date: Wednesday, June 19, 2019 8:26:19 AM

Wednesday, June 19, 2019 Visit our News Clips website

TOP STORIES

Utilities are 'the new cyber battlefield,' as US ramps up pressure on Russia's electric grid
Democrats keep the pressure on storage rules

ELECTRIC

PJM warns of gaming threat, continues fight against IMM's complaint authority

GAS/LNG/OIL PIPELINES

Pipeline project developers press FERC for project decisions
Greens decry 'stealth' LNG export facility in New Jersey
Federal Pipeline Regulators Hear Safety Concerns About Weymouth Compressor From Officials and Residents
62 Md. Lawmakers Release Letter Opposing Public Land Seizure For Potomac Pipeline

HYDRO

'A huge step forward': Tazewell County only site in consideration for Dominion Energy hydroelectric pump
Dominion narrows to Tazewell County site for possible hydroelectric facility
Dickenson County to share in any pumped storage revenue

CONGRESS

Industry hits back on Democratic safety bill
Dems weaponize spending bills on energy, environment
House Democrats float one-year PTC extension, but no storage incentive
House Democrats unveil 3-year extenders package
US House Democrats propose 1-year extension to wind energy tax credit
Renewable leaders on tax credits: 'Let them phase down'
Lawmakers introduce a bevy of energy, environment bills

OTHER AGENCIES

US EPA to issue final carbon rule for existing coal-fired power plants
Utilities worry big tech's bandwidth grab could interfere with grid communication

STATES

SPP seeks commitments for energy imbalance market by late July
Western state climate policies seen adding complexity, benefits to EIM
High retail electricity prices in New England states likely to continue RRA
PG&E to pay $1B for wildfire damages
PG&E reaches $1B deal with Northern California communities hit by wildfires
Ore. House passes carbon cap-and-trade bill, sends it to Senate

INTERNATIONAL/MISC.

Top Stories

Utilitydive.com
June 18, 2019

Utilities are 'the new cyber battlefield,' as US ramps up pressure on Russia's electric grid

AUTHOR

Robert Walton@TeamWetDog

The United States has increased efforts to insert malicious code into Russia's electric grid, a development the The New York Times warned "enshrines power grids as a legitimate target" in the nations' cold war of cyber one-upmanship.

While President Trump denied the story on Twitter, a spokesman for Russian President Vladimir Putin said it meant a cyberwar between the two countries is a "hypothetical possibility."

With utilities in the cross-hairs of malicious actors, experts say there are health, safety and economic risks for those who rely on the grid, particularly if escalation continues.

Critical infrastructure in the U.S., including the electric grid, is "increasingly under attack by foreign adversaries," the head of the Federal Energy Regulatory Commission (FERC), Chairman Neil Chatterje, told lawmakers last week.

Russia and the U.S. have been probing one another's electric grids for years now, but The New York Times report indicates a serious escalation. One anonymous intelligence community source for the Times described U.S. actions as having become "far, far more aggressive over the past year."

Experts in the utility sector say this is likely the new norm, as power grids become more interconnected and growing numbers of devices are generating and consuming power. For customers, the impacts could be deadly.

Utilities "have been at the forefront of the new cyber battlefield for years," Jason Haward-Grau, chief information security officer at cybersecurity firm PAS Global, told Utility Dive in an email.

In 2015, Ukraine's electric grid was hit by a cyberattack, which led to a lengthy blackout for almost 250,000 people. After that, "nation states started awakening to the significant impact [that] loss of the grid can have at a country level," said Haward-Grau.

"The number of national security level cyber incidents is roughly doubling every year."

Jason Haward-Grai

PAS Global

So far, hackers probing the U.S. grid have not caused power disruptions, but the threat landscape is changing and cybersecurity is a major focus for the industry.

"The number of national security level cyber incidents is roughly doubling every year," Haward-Grau said.

Edge computing, the internet of things and artificial intelligence will all make utility grids more efficient, Stewart Kantor, president and CFO of Ondas Networks, told Utility Dive. "But also more vulnerable to debilitating cyber threats," he warned. The company designs wireless networks for critical industrial applications.

Standards, public-private partnerships keep grid stable

Utilities and the federal government now coordinate on security issues, according to the Edison Electric Institute's Scott Aaronson, the group's vice president for security and preparedness. "The threat of cyberattacks targeting critical infrastructure is not new," he told Utility Dive.

The organization, which represents U.S. investor-owned utilities, partners with the government through the Electricity Subsector Coordinating Council to "share actionable intelligence, deploy state-of-the-art tools, and prepare to respond to incidents that could affect our systems," he said. "Protecting the energy grid is our industry's top priority."

The grid operator for New York echoed those ideas. "Preempting cyberattacks and protecting our cybersecurity infrastructure is, and always has been, given the highest priority," Kenneth Carnes, vice president of critical secure services and chief information security officer for the New York Power Authority, told Utility Dive.

"We have multiple levels of cybersecurity defense and, together with our partner utilities, we continually research and invest in new technologies and solutions," Carnes said.

Chatterjee told a House subcommittee last week that the cyber threat to the grid is growing, but that mandatory reliability standards are making a difference.

"America's critical infrastructure is increasingly under attack by foreign adversaries," Chatterjee said. He also noted that the Department of Homeland Security and Federal Bureau of Investigation have each issued public reports describing cyber intrusion campaigns by foreign government actors.

Physical and cyber attacks "have the potential to create significant, widespread and potentially devastating effects that threaten the health, safety and economic prosperity of the American people whom we serve," Chatterjee told lawmakers.

Focus continues on control technology

All this comes as security firm Dragos announced last week that the Xenotime threat actor group expanded its efforts beyond oil and gas and into the electric utility sector. And the threat is unlikely to abate, as technology becomes more sophisticated.

"Industrial control system cyber threats are proliferating," the firm said in a June 14 blog post, and "more capable adversaries are investing heavily in the ability to disrupt critical infrastructure."

Dragos said that beginning late last year, Xenotime began probing electric utility networks in the U.S.

The firm said the high cost of coordinating an industrial attack has meant efforts were very focused. "But as more players see value and interest in targeting critical infrastructure — and those already invested see dividends from their behaviors — the threat landscape grows."

This is the new normal, according to Renaud Deraison, co-founder and CTO at Tenable.

"The latest reports that Xenotime is targeting electric utilities in the U.S. and Asia-Pacific region should come as no surprise, but certainly warrants concern," he said in a statement. "The ongoing threats to operational technology and critical infrastructure are no longer theoretical, they have become our new reality."

Return to Top

E&E Daily
June 19, 2019
FERC

Democrats keep the pressure on storage rules

Jeremy Dillon, E&E News reporter

Senate Democrats want the Federal Energy Regulatory Commission to keep working to ensure grid operators fully integrate energy storage options into their markets by the end of the year.

In a letter to FERC Chairman Neil Chatterjee yesterday, a group of 13 Senate Democrats and one independent, led by Sen. Sheldon Whitehouse (D-R.I.), urged the commission to maintain its efforts on storage. The group includes presidential candidates Bernie Sanders (I-Vt.), Michael Bennet (D-Colo.) and Cory Booker (D-N.J.).

The group said it wants to see continued progress on the full implementation of Order No. 841, finalized in early 2018, which opened energy storage technology to compete in wholesale markets.

"Order No. 841 is fostering productive market changes across this country," the lawmakers wrote. "To its credit, FERC has rebuffed efforts to weaken the rule."

FERC recently rejected a request to reopen the energy storage order, despite a dissenting concurrence from Commissioner Bernard McNamee, who argued FERC may have overreached into state domain (Energywire, May 17).

"We urge FERC to reject similar efforts to limit the scope of market competition as it negotiates compliance plans" with regional transmission organizations and independent system operators, the senators wrote.

"To that end," they said, "we encourage FERC continue to coordinate with the RTOs/ISOs to ensure full implementation of updated storage rules by the regulatory deadline."

As part of the efforts to get the order in place, FERC staff issued deficiency letters to grid operators in April seeking updates on how they planned to address storage definitions, tariff structures and interconnection, among other areas.

Chatterjee has held up the energy storage order as one of the commission's signature accomplishments to promote markets as a way to combat climate change.

Whitehouse and Sen. Ed Markey (D-Mass.) brokered a deal with Chatterjee during his confirmation that enabled the former energy adviser to Senate Majority Leader Mitch McConnell (R-Ky.) to join the commission in August 2017 in exchange for his making the storage order a priority while there.

This story also appears in Energywire.

Twitter: @JeremyDillonDC Email: jdillon@eenews.net

Return to Top

Electric

S&P Global Platts
June 18, 2019

PJM warns of gaming threat, continues fight against IMM's complaint authority

By Jasmin Melvin

A change sought by the Electric Power Supply Association to the penalty structure tied to intraday offers in PJM Interconnection 's energy market could open that arena up to gaming, the grid operator warned, as it also continued to push the US Federal Energy Regulatory Commission to limit the ability of the regional transmission organization's independent market monitor to file complaints.

The grid operator's comments, filed with FERC , respond to pleas for the commission to rethink aspects of an April order (ER16-372) that approved a batch of changes to PJM 's implementation of hourly offers and calculation of penalties for market sellers that do not follow PJM -approved fuel cost policies.

Those pleas included a rehearing request from EPSA that argued for removal of the one-day minimum of penalties for submitting non-compliant cost-based offers.

EPSA said automatic imposition of a penalty prior to notification of an infraction was "unduly punitive." It added that such retroactive penalties were otherwise prohibited by FERC , and capping such penalties at one day did not make the practice any less unlawful.

Unreasonable, creates gaming opportunities

But PJM countered that "EPSA's position that market sellers should never be penalized if a non-compliant cost-based offer is corrected prior to PJM notifying such market seller is unreasonable and would create potential gaming opportunities."

Specifically, it would allow sellers to knowingly submit non-compliant offers for brief periods with no penalty, potentially raising locational marginal prices and disrupting proper dispatch of resources, PJM asserted.

"A one-day penalty strikes the appropriate balance between unduly penalizing a market seller of a non-compliant cost-based offer prior to being notified of the offending offer, while maintaining an effective deterrent against potential gaming behavior that could adversely impact the markets ," the grid operator said.

PJM ’s filing also took aim at a motion for clarification, or alternatively rehearing, submitted by PJM 's IMM, Monitoring Analytics, to broaden the IMM’s recourse when it disagrees with the grid operator over whether a cost-based offer is non-compliant.

Complaints, other action

The IMM would like PJM ’s operating agreement amended to replace language that directs it to refer such disagreements to FERC ’s Office of Enforcement with language explicitly permitting the IMM to file a complaint or take other regulatory action.

PJM , however, contends that the enforcement office “is the proper branch of the commission to address allegations of rule violations or improper marketseller offers.”

“The market monitor’s authority to file complaints or initiate other regulatory proceedings, while still being part of the PJM organization, presents broad legal and policy questions,” the grid operator added. “Until the commission is prepared to resolve these issues, it would be inappropriate to expand the wording of the existing tariff as requested by the market monitor here.”

PJM is separately seeking rehearing of the April order over FERC ’s denial of its request for clarification that the IMM is not authorized to file fuel cost policy-related complaints against the grid operator.

The IMM has said in the FERC docket that PJM ’s arguments on this matter have no merit.

Return to Top

Gas/LNG/Oil Pipelines

S&P Global Platts
June 18, 2019

Pipeline project developers press FERC for project decisions

By Maya Weber

June 14 has come and gone, and supporters of several interstate natural gas pipeline projects that had asked the Federal Energy Regulatory Commissionto approve their projects by that date are still waiting.

FERC has cleared four high-profile LNG export projects this year, but amid a divide at FERC over environmental reviews, uncertainty has remained about the timing of decisions even for some smaller pipeline projects that would move gas to markets.

Decisions could come at any time, and at least one developer was hopeful about seeing a certificate order “any day now.” Still, a handful of pipelineexpansions have seen no decision at least four months after a final environmental report.

Williams June 4 asked FERC to act by June 14 on its 7.7-mile Southeastern Trail project, intended to add 296,375 Dt/d of gas delivery capacity to Mid-Atlanticand Southeastern states in time for the 2020-21 winter heating season. The company wrote FERC to “emphasize the importance of prompt commission action” so that it would complete work for a November 2020 start. With an environmental assessment in hand February 8, it previously sought action by May 1.

Tallgrass Energy also asked FERC to decide on its Cheyenne Connector Pipeline and Cheyenne Hub projects by June 14, noting that timing uncertainties could impact the 2019 and 2020 growing seasons for farmland traversed.

“The Cheyenne Connector Pipeline Project will bring an extra 600,000 Dt/d of liquidity to the natural gas market ... by connecting northeast Colorado gasproduction to the Cheyenne Hub market, a liquid trading point with access to multiple pipelines and downstream markets,” Tallgrass said in a May 30 letter.

“We expect our FERC certificate any day now,” said Tallgrass spokeswoman Phyllis Hammond, asserting all major milestones for the two projects have been achieved.

New Mexico production

Customers have also recently nudged FERC for decisions. The New Mexico Oil and Gas Association asked FERC June 4 to act on the 400 MMcf/d Sendero Carlsbad Gateway project, which would expand

capacity between a gas processing plant in southeastern New Mexico and the Waha Hub in Texas .

“This proceeding has been fully ripe for commission action for a considerable time now,” it said, calling the project important to growing regional production, and suggesting there were no protests and there was a finding of no significant impact. The environmental assessment was issued January 11.

“Pipeline applicants request particular in-service dates in order to be confident that construction schedules can be maintained and commercial commitments can be fulfilled; so there can be real consequences if these deadlines are not met,” Don Santa, president of the Interstate Natural Gas Association of America, said in an emailed statement. No gas projects were listed on FERC ’s agenda for its monthly open meeting Thursday.

GHG considerations

The exact reasons for any delays to developers’ desired schedules are hard to discern, given FERC ’s rules against ex parte communications on pending projects. One area dividing commissioners on pipeline projects has been whether FERC calculates upstream or downstream greenhouse gas emissions and considers their significance. A recent decision from the US Court of Appeals for the District of Columbia Circuit that touched on those issues did not appear to bridge that divide.

Potentially seeking to overcome that hurdle, Williams, in its recent letter, highlighted its calculations of an upper bound estimate of downstream emissions for the Southeastern Trail project — an increase of 6.3 million short tons/year of carbon dioxide equivalents. Commissioner Cheryl LaFleur, a key swing vote, has often included such calculations in concurring statements in projects she has chosen to support.

Cheyenne Connector has seen other debates in its dockets, including over an alternative Kinder Morgan proposed.

Industrial consumers in April also pressed for approval of the Adelphia Gateway project, which would carry Marcellus gas to Philadelphia and other Northeast markets. “Manufacturing investment and jobs are directly and negatively impacted by not having the pipeline in service,” they wrote. In that docket, environmental groups argued FERC did not account for GHG emissions associated with a proposed amendment to increase capacity.

Separately, Williams has responded to New Jersey regulators’ rejection of its application for the Northeast Supply Enhancement project by filing new water quality and other permit applications with the state.

“We strongly believe the discrete technical issues raised by the [New Jersey Department of Environmental Protection] June 5 ... were addressed in our previous application and, in this application, we have provided additional information showing that these issues have been addressed,” Williams spokesman Christopher Stockton said in a statement.

Pending **gas** project applications at **FERC**

	Docket #	Capacity	Final EIS/EA	*Agency deadline
PENDING LNG PROJECTS				
Texas LNG	CP16-116		15-Mar-19	13-Jun-19
Corpus Christi Stage 3	CP18-512		29-Mar-19	27-Jun-19
Eagle **LNG**	CP17-41		12-Apr-19	11-Jul-19
Gulf **LNG** Liquefaction	CP15-521		17-Apr-19	16-Jul-19
Annova **LNG Brownsville**	CP16-		19-Apr-19	18-Jul-19

	480			
Rio Grande LNG	CP16-454		26-Apr-19	25-Jul-19
Plaquemines	CP17-66		3-May-19	1-Aug-19
Jordan Cove	CP17-495		11-Oct-19	9-Jan-20
Alaska LNG	CP17-178		6-Mar-20	4-Jun-20
PENDING PIPELINE PROJECTS				
Sweden Valley Project	CP18-45	120 MMcf/d	31-Aug-18	29-Nov-18
South Mainline Expansion	CP18-332	182,085 Dt/d	14-Dec-19	12-Feb-19
Cheyenne Connector and Hub	CP18-102	600 MMcf/d	18-Dec-18	18-Mar-19
Adelphia Gateway	CP18-46	850 MMcf/d	4-Jan-19	4-Apr-19
Sendero Carlsbad Gateway	CP18-538	400 MMcf/d	11-Jan-19	11-Apr-19
Southeastern Trail	CP18-186	296 Mmcf/d	8-Feb-19	9-May-19
Willis Lateral Project EA	CP18-525	200 MMcf/d	4-Mar-19	2-Jun-19
Sabine Pass Compression	CP18-487	400 MMcf/d	8-Mar-19	6-Jun-19
Del-Mar Energy Pathway	CP18-548	11.8 MMcf/d	1-Apr-19	30-Jun-19
Buckeye XPress Project	CP18-136	275 MMcf/d	20-May-19	18-Aug-19
West **Loop** Project	CP19-26	150 MMcf/d	28-May-19	26-Aug-19
Lockridge Extension **Pipeline**	CP19-52	500 MMcf/d	31-May-19	29-Aug-19
MVP Southgate	CP19-14	375 MMcf/d	19-Dec-19	18-Mar-20

*authorization deadline for agencies cooperating in **FERC** process

Source: **FERC**

Pending **gas** project applications at **FERC** **PENDING** **LNG** **PROJECTS** **Texas LNG** Corpus Christi Stage 3Eagle **LNG** Gulf **LNG** LiquefactionAnnova **LNG Brownsville Rio Grande LNG** Plaquemines **Jordan** Cove **Alaska LNG** **PENDING** **PIPELINE** **PROJECTS** **Sweden** Valley ProjectSouth Mainline Expansion**Cheyenne** Connector and HubAdelphia GatewaySendero Carlsbad GatewaySoutheastern TrailWillis Lateral Project EA **Sabine Pass** CompressionDel-Mar Energy PathwayBuckeye XPress ProjectWest **Loop** ProjectLockridge Extension **Pipeline** MVP Southgate*authorization deadline for agencies cooperating in **FERC** processSource: **FERC**

Return to Top

The Energy Daily
June 19, 2019

Greens decry 'stealth' LNG export facility in New Jersey

BY JIM DAY

Igniting what is quickly shaping up as one of the next big fights over natural gas infrastructure, the Delaware River Basin Commission last week approved dredging and construction activities for what project opponents are calling a "stealth" liquefied natural gas export terminal designed to ship Marcellus shale gas from a now-shuttered industrial complex on the Delaware River in New Jersey to the Caribbean and other overseas markets.

The commission voted 5-0 June 12 to approve dredging and construction of dock facilities proposed by Delaware River Partners—a unit of LNG infrastructure developer New Fortress Energy—at DuPont's former Repauno Plant site in Gibbstown, N.J.

The project has been in the works since 2016 to develop the docks for shipments of natural gas liquids. In April, however, the Delaware River Basin Commission (DRBC) quietly issued a notice indicating that LNG also would be one of the export products.

Not surprisingly, that immediately set off a storm of protests from environmental groups opposed to construction of LNG export facilities and other new gas infrastructure that would facilitate increased production and consumption of Marcellus shale gas, leading to increased greenhouse gas emissions.

"No public documents, permit applications or public notices for public comment, including those dated March 2019, have ever included any mention that this site is in fact to be developed, in part, as a facility to handle and export LNG," the Delaware Riverkeeper Network wrote in a May 29 letter to the DRBC, the Federal Energy Regulatory Commission and other state and federal permitting agencies.

"And yet,…there is in fact an intention by site developers, owners, and/or operators to develop and use this site as, at least in part, an LNG export facility," said the green group, which has frequently challenged FERC approvals of gas infrastructure.

In its application to the DRBC, Delaware River Partners (DRP) describes the Gibbstown Logistics Center as a deepwater port on the river that will "support the transloading of a variety of bulk liquid products, including butane, isobutane, propane (collectively liquefied petroleum gas, or LPG), liquefied natural gas (LNG), and ethane."

The LNG and natural gas liquids would arrive at the port via truck or railcar to be loaded onto the ships, and there would be no liquefaction or bulk storage at the site, according to the DRBC filings.

Interestingly, the New Jersey Department of Environmental Protection (DEP) in May issued a water quality certification under Section 401 of the Clean Water Act for the port project, but then suddenly suspended that permit June 5—just a few days after the green groups raised their "stealth LNG" objections. The DEP said it issued the suspension because there had been a publishing error when the agency first printed the project application in March.

Last month, DEP officials under Gov. Phil Murphy (D) denied a Section 401 permit for a different gas infrastructure project, Williams' Northeast Supply Enhancement expansion of its Transco gas pipeline. That action made New Jersey one of just a handful of states that have blocked a gas infrastructure project at the urging of green groups intent on cutting gas use and GHG emissions.

New Fortress' filings with the Securities and Exchange Commission indicate the company is developing an $800 million liquefaction facility in Wyalusing, Pa., that will produce 3.6 million gallons of LNG per day beginning in 2021. The company operates or is currently developing LNG import and regasification terminals in Mexico, Jamaica and Puerto Rico, as well as the small Miami LNG export terminal in Florida.

The LNG from the Pennsylvania liquefaction facility could reach those overseas import terminals through the Gibbstown port project, according to the filings from New Fortress, which was founded by Milwaukee Bucks owner Wesley Edens and taken public in an initial public offering earlier this year.

"We are developing a transportation system specifically dedicated to transporting LNG from our liquefaction facilities to a nearby port, from which our LNG can be transported to our operations in the Atlantic Basin and elsewhere," New Fortress told the SEC last month.

The plan to deliver large volumes of LNG to a port facility by truck or rail comes as the federal Pipeline and Hazardous Materials Safety Administration (PHMSA) is considering a proposal to allow transport of LNG in dedicated cryogenic rail cars. That is currently allowed for some NGLs, but to date LNG has had to be carried in insulated shipping containers that are then loaded onto trains, a logistics process that PHMSA has noted is much less efficient.

In approving construction of the dock facilities at the Gibbstown Logistics Center, DRBC officials emphasized that the commission does not have jurisdiction over the siting of an LNG export facility or to authorize LNG exports, which falls under the jurisdiction of the Energy Department.

Instead, the DRBC only has jurisdiction over dredging and construction activity that could impact water quality in the Delaware River. New Jersey environmental regulators also must issue permits for the site before construction could begin, the DRBC officials noted.

After the commission vote, the New Jersey chapter of the Sierra Club noted that exports of LNG could grow well beyond the 3.6 million gallons to be produced per day by the New Fortress facility in Pennsylvania if DOE authorizes greater exports, as it has done consistently.

"These numbers can be greatly expanded if New Fortress gets an export license," said Jeff Tittel, director of the Sierra Club's New Jersey chapter. "This [DRBC vote] is just the beginning of the battle, this is not the end."

If authorized, the Gibbstown port would become one of several LNG export facilities on the Atlantic Coast, joining Dominion's Cove Point LNG terminal in Maryland, Kinder Morgan's Elba Island LNG facility in Georgia and a handful of smaller facilities where LNG in containers is loaded onto cargo ships.

Return to Top

WGBH.org
June 18, 2019

Federal Pipeline Regulators Hear Safety Concerns About Weymouth Compressor From Officials and Residents

By Craig LeMoult

The hearings and arguments over the proposed natural gas compressor station in Weymouth have focused in recent months on the state approval of an air quality permit.

On Monday, the attention turned to safety issues. And this time it was federal officials who were listening.

The Weymouth compressor would be built on a four-acre lot in an industrial area just over the massive Fore River Bridge from Quincy. Compressor stations increase the pressure in pipelines, speeding the movement of natural gas so it can travel further. Enbridge, the company that plans to build the station, says this project would provide extra capacity on its Algonquin Gas Transmission and Maritimes & Northeast Pipeline systems to move natural gas into New England and on to markets in the Canadian Maritime provinces.

The Federal Energy Regulatory Commission (FERC) approved the project in 2017, and a court challenge filed by Weymouth was defeated. The proposal has drawn fierce opposition from residents of Weymouth and its surrounding towns, as well as most of the politicians representing them. That was clear Monday night.

Rep. Steven Lynch invited representatives of the Pipeline and Hazardous Materials Safety Administration, or PHMSA, to come hear from the community. And from the beginning of the meeting, he made it perfectly clear where he stands on the issue.

“I think at the outset it’s fair to say that there remains a deep and abiding frustration among most, if not all, of the people who gather here tonight with the FERC regulatory process thus far,” Lynch said. “We don't believe that FERC has listened to us. And we don't believe that the courts have listened, and we don't believe that we've been treated fairly.”

Despite that, Lynch expressed some optimism that the PHMSA officials might intercede to stop the proposed compressor station. Weymouth mayor Bob Hedlund was more down about the prospect of anything changing.

“Why would I be pessimistic?” Hedlund asked as he addressed the three PHMSA officials at the meeting. “Just from a federal standpoint alone — and I recognize that you guys are federal officials — we’ve tried to bring our concerns about public safety to the attention of federal officials. We’ve tried to bring to the attention of federal official our concerns about public health. And we feel really it has fallen on deaf ears. We feel that the process really is weighted — and I’m saying this diplomatically — weighted for the opponents. That may be a strong understatement.”

Linda Daugherty of PHMSA responded by thanking the elected officials and community members for sharing their concerns.

“We are listening to you,” she said. “And we will do our best to provide answers or make a difference. That’s the best we can do and hope to do.”

Lynch acknowledged that PHMSA doesn’t have authority over siting of facilities like the compressor station and has relatively little oversight power. But he said they can designate “high consequence areas” in which the agency is empowered with greater authority for inspections and risk analysis. Lynch said that designation could be made if a site met any of three criteria: if it’s near a high density of population, if it would threaten a sensitive environmental area or if it could pose a threat to vessels in navigable waters. And he said the proposed Weymouth site meets all three.

Lynch said there were eight other possible locations considered by the Federal Energy Regulatory Commission. “But in the end, they picked the worst one,” he said. “This is the one site where those three risks, those three dangers are present.”

Mary Lee Hanley, a spokesman for Enbridge, says the station should not be a source of concern. “Enbridge’s Weymouth compressor station will be built to meet or exceed all federal safety standards and regulations,” she said on Tuesday.

As Monday’s hearing opened up for statements from community members, though, a recurring theme in their comments was the natural gas fires and explosions in the Merrimack Valley last fall, which destroyed homes and killed one person.

“And that was just an ordinary gas line,” said Louise Quigley of North Braintree. “Here they want to do a compressed natural gas? These things sometimes have accidents, and if this thing had an accident it would make what happened in Lawrence look like a campfire to roast marshmallows at,” she said to applause from the crowd. “It would be terrible.”

Return to Top

CBS Baltimore
June 18, 2019

62 Md. Lawmakers Release Letter Opposing Public Land Seizure For Potomac Pipeline

HANCOCK, Md. (WJZ) — 62 Maryland lawmakers have signed on to an open letter opposing an effort by

Columbia Gas Transmission to build a three-and-a-half mile long fracked-gas pipeline under public lands in the western part of the state.

The company, owned by Alberta-based TC Energy, filed a federal lawsuit against the state last month to gain access to state property to drill a pipeline under the Western Maryland Rail Trail. The state's attorney general has moved to dismiss the suit, saying the Constitution does not allow a federal court to order a state to grant an easement in cases like this.

In the letter, the lawmakers called Columbia Gas's lawsuit, "an affront to the democratic processes that have denied them access to this land."

In January, the Maryland Board of Public Works voted unanimously against granting the company an easement to build the pipeline, which would transport fracked natural gas from Pennsylvania to a proposed factory in West Virginia.

A number of environmental groups have also voiced their opposition to the pipeline.

TC Energy released a statement to WJZ Tuesday afternoon, saying:

"The legal action is not a direction in which we prefer to proceed. As a company, we are proud of our commitment to working collaboratively with landowners and delivering the project in a safe and environmentally responsible manner. In fact, we have successfully reached agreements with all private landowners along the project route in Maryland and West Virginia and have received necessary approvals from the Federal Energy Regulatory Commission, as well as the Maryland Department of Environmental Protection."

Return to Top

Hydro

Bluefield Daily Telegraph
June 19, 2019

'A huge step forward': Tazewell County only site in consideration for Dominion Energy hydroelectric pump

By CHARLES BOOTHE Bluefield Daily Telegraph

—

TAZEWELL, Va. — With Tazewell County now the only site being considered for a $2 billion Dominion Energy hydroelectric pump storage facility, the economic landscape of the area may be on the verge of a game-changing decision.

With more than 2,000 construction jobs on the line and millions in annual tax revenue for Southwest Virginia, the impact would be enormous if Dominion finds the site suitable for the massive project.

Jeremy Slayton, communications specialist with Dominion, and Spencer Adkins, director of generation projects, were in Bluefield Tuesday morning to announce that the other site which was under consideration in Wise County has been eliminated for this project.

Slayton said the Wise County site, which would have used the abandoned Bullitt Mine, "is not suitable" for a large-scale project that Dominion is considering due to the water in that mine.

The decision has cleared the way for the Tazewell County site, if everything falls into place from a geotechnical/environmental standpoint.

"We are going to perform more extensive surveys of the location in Tazewell on the East River mountain site," Slayton said.

That site is on the south side of East River Mountain just west of Bluefield and has already seen some geotechnical surveys and environmental studies, but now more will be needed.

A pump storage facility is akin to a "giant battery," with two large reservoirs, one near the top of East River Mountain and one near the bottom. Both reservoirs will be filled with water and power is generated when water is released from the upper reservoir to the lower one, cascading through tunnels more than 1,000 down

the mountain, providing the power to rotate turbines.

Power would be provided to Dominion on demand since it can be generated “within minutes” at the facility, Adkins said, and then transmitted to any location on Dominion’s electric grid.

Adkins said that with the focus now only on Tazewell County, more work is needed to make “absolutely” sure the site is suitable for the project.

Those studies, he said, will most likely go into 2020 before a final decision can be made.

“Based on our research thus far, we are encouraged about the potential for the Tazewell site to support a pumped storage facility,” said Dominion Energy’s Mark Mitchell, vice president generation construction.

One of the new issues to address for the Tazewell County site is a potential water source because the original plan looked at an abandoned mine at Amonate for water.

However, that plan was scrapped after it could not be determined if enough water was available in the mine.

Now, they are looking at Wolf Creek for the approximate 6.5 billion gallons of water needed.

“It’s not a slam dunk yet,” Adkins said of locating in Tazewell County, adding that it’s a matter of performing all the necessary due diligence.

Public meetings on the project are set for next month to answer any questions.

The first meeting will be held on July 16 at Graham High School from 4:30 p.m. to 7:30 p.m.

Another meeting is scheduled for July 18 at Bland High School from 4:30 p.m. to 7:30 p.m.

If the project is given the green light, it will bring more than 2,000 jobs during the construction phase, which lasts five to seven years, and about 50 permanent jobs after completion.

The project would take about 10 years to complete and bring a huge economic boost to the area.

According to a report released by the Richmond-based Chmura Economics & Analytics, the proposed power station would bring about $320 million annually in economic benefits to the region during construction, $37 million a year after completion as well as about $12 million a year in tax revenue for local governments.

When the project first surfaced, seven localities agreed to a revenue-sharing plan, with the county where the plant would be located receiving the most money.

That agreement, which was worked out with coalfield counties and the City of Norton, gives the county where the facility will be constructed the lion’s share of the revenue, or 22 percent of the estimated $12 million annually.

That would mean more than $2.5 million a year for Tazewell County.

“It would certainly be a wonderful, wonderful thing for Tazewell County,” said Eastern District Supervisor Charlie Stacy. “We’re excited and it’s one of those things where you tell people to be cautiously optimistic.”

Stacy said that since the other site has been eliminated Dominion can put all their resources into Tazewell County.

“This is a huge step forward,” he said.

But Adkins said all of the studies need to be completed before that final decision is made and work will start in about two months on more core drillings, which will require a permit from Tazewell County.

Eight were done last summer to determine if the land that will be underneath the reservoirs is suitable.

Adkins said the preliminary results are back and those are positive.

Drilling now will be focused on the tunnels and powerhouse.

For example, the tunnels may have to be lined with concrete or other materials, he said, depending on what the drillings may find.

More drillings will also determine if the earth can handle a powerhouse at the lower reservoir, which will be underground.

“We want to make sure we have no issues,” he said. “We need more data in order to do that.”

Adkins said the extra drilling is not because of any federal or state regulations that still need to be met, but

for the company's assurance it can do what it plans to do.

"We want to further enhance our design," he said.

The other issue that will be addressed is the water source.

With Wolf Creek now a potential water source, impact studies will also be completed to make sure the gradual taking of water from the creek poses no problems. The source site is in Bland County near Rocky Gap,

Gauges are already collecting data on water flow, he said, and once the process starts it would take about two years to fill up the reservoirs.

Once that is done, however, no more water would be needed other than to replenish some due to evaporation or other minor losses.

Dominion owns 2,600 acres of land in the Nye Valley Road area where the facility would be located, with the possibility of acquiring more if needed.

Work started on the site right after September 2017, when the project was first announced.

Adkins said roads were built on the property as well as bridges so the equipment needed for the studies could have access, including large drilling machines.

The scope of the project helps explain why so much preliminary work must be done to make sure all is in place geographically to handle it.

A 200-ft. high earthen-based dam is needed for the 2,000-ft. long lower reservoir with water covering 235 acres.

The powerhouse, which will hold four large turbines, will be at the lower reservoir and the structure is 450 feet long, 150 feet high and 100 feet wide. Each turbine will produce more than 200,000 kilowatts for a total of 850,000 kilowatts, enough to power about 250,000 homes.

At the top of the mountain, about 1,000 feet away, would be the upper reservoir at an elevation of over 3,000 feet. That dam will be 175 feet high and the water will cover 229 acres.

During a tour of the site last summer, Dominion engineer Chris Nunn said because of the contour of the land at the top, which is a gradual slope rather than a sharp dropoff, the dirt/rock that needs to be excavated will be used for the base of the dam so none will have to be hauled in.

A 1,200-foot-long tunnel will run from the upper to the lower reservoir.

The diameter of that tunnel will be 27 feet and it's called a "headrace" tunnel. But before it reaches the lower reservoir it will split off into four tunnels, called "penstock" tunnels, each with a 15 foot diameter. Those four send water through the entrance to the powerhouse and power each of the four turbine motors to generate electricity.

"The water is then pumped back up to the upper reservoir," Nunn said. "Once the reservoirs are filled, no more water will be needed (in large quantities."

A KV 765 power line runs across East River Mountain and through part of the area where the facility would be, Adkins said, providing convenient access for transmission.

Not only are more intensive studies required, but federal hoops must be cleared as well, including the process of receiving eventual approval from FERC (Federal Energy Regulatory Commission), Adkins said.

That process takes two to four years, which helps explain the 10-year time frame needed for the facility to be constructed and become operational.

Adkins said an application for preliminary work was filed with FERC in September 2017 and another one will be filed later this year.

"We have been in close contact with Dominion as their due diligence process proceeds," said Tazewell County Administrator Eric Young. "The hydro pumped storage project would be a transformative event for our economy with countless opportunities for our residents and residents throughout our region."

Young said the county understands "there are many geological tests, soil tests, environmental impact analyses, and feasibility studies yet to be performed. Tazewell County will continue to work with Dominion as they proceed with this phase of their work."

“The announcement by Dominion is exciting news,” said Mike Hymes, Southern District supervisor. “We continue to be optimistic about this project locating here and the great economic benefit the project will bring to the area. I understand Dominion will continue to assess the area in Tazewell County to make sure their investments will pay off with a completed project. Our board continues to work diligently with the Dominion officials to make sure any of their ongoing needs are met.”

State Sen. Ben Chafin (R-38th), Del. Terry Kilgore (R-1st), and Del. Todd Pillion (R-4th) released a statement on the potential impact of pumped storage in Southwest Virginia.

“We appreciate the work that Dominion Energy is continuing to invest in studying the feasibility of a pumped storage project in Southwest Virginia,” they said. “Throughout this process, our top priorities have been and continue to be job creation, economic opportunity, and investments in our communities. We are committed to keeping Southwest Virginia the energy capital of the Commonwealth.

“To complement efforts on pumped storage, we passed legislation this year creating the Southwest Virginia Energy Research and Development Authority. The Authority will promote opportunities for energy development in Southwest Virginia, to create jobs and economic activity, and to position our region as a leader in energy workforce and energy technology research and development.”

The site for the facility will be located in this region because of legislation passed several years ago that allows the company to recoup construction expenses if it provides jobs in a depressed area.

Dominion has a pump storage facility in Bath County, the largest of its kind in the world.

That facility can produce about three times the amount of electricity the proposed Tazewell County plant can generate.

Adkins said that as part of the requirement in the legislation, a renewable energy project must also be be included at some point.

Concern had been expressed by area residents of a possible wind turbine effort on top of East River Mountain to accompany the proposed facility project. That was also related to a previous inquiry by Dominion to look into the possibility about 10 years ago, but the proposal never advanced.

Adkins said the renewable energy aspect of the project has not been determined and is not on the immediate horizon.

He also said it can be wind or solar and can be located anywhere on the Dominion grid, not just in Southwest Virginia.

Adkins also said that the hydroelectric pump storage facility provides “clean” energy because it does not rely on fossil fuels and does not pollute.

— Contact Charles Boothe at cboothe@bdtonline.com

Return to Top

Roanoke Times
June 18, 2019

Dominion narrows to Tazewell County site for possible hydroelectric facility

By Amy Friedenberger amy.friedenberger@roanoke.com 981-3356

Dominion Energy has narrowed its search for a site for a hydroelectric pumped storage facility to Tazewell County.

Dominion officials said Tuesday the energy company dropped its consideration of the Bullitt mine site in Wise County and is now focused on a spot in Tazewell County on East River Mountain where Dominion already owns most of the property. If the station were located there, it would take about 10 years to complete the project.

Pumped storage facilities move water to create energy during peak electricity times. Dominion already operates the Bath County Pumped Storage Station, the most powerful such plant in the world. It creates about 3,000 megawatts of energy — enough to power 750,000 homes. The one in Tazewell would be about

800 megawatts.

Dominion is now in the process of studying additional environmental aspects, such as water sources, said Spencer Adkins, director of generation projects. The Richmond-based company has its eyes on Wolf Creek in Bland County as the water supply for the facility. It had previously considered using a flooded coal mine in Amonate, but it didn't have an adequate amount of water.

Dominion has to go through the Department of Environmental Quality to make sure there isn't a negative effect on Wolf Creek. This could take about two years.

"Environmental stewardship is important to us at Dominion," said Dominion spokesman Jeremy Slayton.

The rugged terrain often works against economic development and infrastructure efforts in Southwest Virginia. But it's important to building closed-loop hydropower plants.

"One thing you definitely need to have if you're going to have pumped storage is topographic features where you have an upper reservoir that is very much higher than your lower reservoir, so when you release that water, there's enough force to turn the turbines to produce electricity," Adkins said. "So in that part of Southwest Virginia, there's a lot of mountains."

The hydroelectric pumped storage facility has been a project the Southwest Virginia lawmakers have been working on as they work to promote energy development following the decline in the coal industry.

In 2017, then-Gov. Terry McAuliffe signed legislation from Del. Terry Kilgore, R-Scott, and Sen. Ben Chafin, R-Russell, that would fast-track pumped storage facilities amid a push by coalfields legislators to bring jobs and economic development to the far Southwest Virginia region. This encouraged Dominion to look to Southwest Virginia to build a new hydroelectric facility.

The state legislation requires a renewable component, but it doesn't specify how much renewable energy needs to be generated as long as it's fed into the grid. Adkins said what kind of renewable energy, how much and where it would be located would be determined later.

Last year, President Donald Trump signed legislation from U.S. Rep. Morgan Griffith, R-Salem, aimed at expediting the permitting process for closed-loop hydropower plants. The Federal Energy Regulatory Commission would have to make a decision on a hydropower project within two years of its application being submitted.

Dominion filed a preliminary permit with the Federal Energy Regulatory Commission for the Tazewell County location in 2017, and it will submit a pre-application document with the commission this fall.

Griffith was hopeful a mine would be used, but said he's pleased the project is still moving forward in Tazewell.

"We won't look a gift horse in the mouth," Griffith said.

Dominion had been working with Virginia Tech to study whether the abandoned Bullitt mine site in Appalachia could be suitable for a similar project. This facility would involve using old underground mine passages as the lower reservoir for a pumped storage facility — a design that's never been used before. A study determined the site wouldn't support the desired scale of the facility.

If the project in Tazewell County gets approval, it is estimated that more than 2,000 jobs would be created during the five to seven years of construction. About 30 to 50 permanent jobs would be created.

The annual tax revenue would be $12 million, and it would be split among localities: 22% to Tazewell County, 16% to Wise County, 12% to Buchanan, Lee, Russell and Scott counties, 10% to Dickenson County and 4% to Norton.

"Throughout this process, our top priorities have been and continue to be job creation, economic opportunity, and investments in our communities," Chafin, Kilgore and Del. Todd Pillion, R-Washington, said in a joint statement.

The legislators said this revenue will provide a boost to schools, law enforcement and other local needs.

This past legislative session, Chafin and Kilgore got a bill passed to create the Southwest Virginia Energy Research and Development Authority to fuel energy technology research and development. Among its tasks will be supporting the hydropower plant.

"Through these projects and initiatives, we are working to provide solutions to challenges and needs in our

communities right now and forming a foundation to address workforce, economic, and educational needs that can help thrust Southwest Virginia to the future — and the forefront — of energy research and development," Chafin, Kilgore and Pillion said in their statement.

Return to Top

Dickenson Star
June 18, 2019

Dickenson County to share in any pumped storage revenue

BY TERRAN YOUNG • STAFF WRITER

NORTON — Dominion Energy is no longer considering the Bullitt mine site in Appalachia for a planned pumped storage energy project.

Dominion is now looking solely at the East River Mountain site in Tazewell County and all counties in the region will share in the $12 million in tax revenue if the facility is built, based on a revenue-sharing agreement between the seven coalfield counties and the city of Norton.

Dickenson County will receive 10 percent of the tax revenue. Buchanan, Lee, Russell and Scott counties will receive 14 percent each. Wise County will receive 16 percent. Tazewell County will receive 22 percent. Norton will receive 4 percent of the annual tax revenue.

During a Monday morning interview in Norton, Spencer Adkins, Dominion Energy's director of general projects, confirmed that the Bullitt mine site is "not utilities scale.

"We did an analysis of the Bullitt mine and could not determine how much water would be available."

While the Bullitt mine site is not suitable for an 800-megawatt facility, Adkins believes it could be used by another company for pumped storage on a smaller scale.

If the Tazewell County site is approved, it is estimated that more than 2,000 jobs will be created during the five- to seven-year construction period. Between 30 and 50 permanent jobs will be created.

Legislation encouraging development of pumped storage power in the coalfields was introduced by state Dels. Terry Kilgore, R-Gate City, and Del. Todd Pillion, R-Abingdon, and Sen. Ben Chafin, R-Lebanon. It was signed into law in 2017 by then-governor Terry McAuliffe.

Dominion Energy Communication Specialist Jeremy Slayton explained pumped storage in an email:

"Pumped hydroelectric storage stations store kinetic energy in the form of water. When electricity is in high demand, water is released from an upper to a lower reservoir through tunnels, spinning turbines to produce electricity. At times when energy demand is low, the water is pumped back into the upper reservoir to be stored until additional generation may be needed. The 'on-demand' nature of pumped storage technology makes it an appealing resource, because it compliments the use of intermittent energy sources like renewables."

Currently, the Tazewell site is in the "feasibility stage." According to Adkins and Slayton, Dominion Energy is looking at environmental aspects such as geotechnical borings and water sources.

Adkins said that the next step is for Dominion to submit a preliminary application to the Federal Energy Regulatory Commission. This process could take between two and four years.

Dominion Energy will be taking questions and providing more information at upcoming open house events. Open houses are on July 16 at Graham High School in Bluefield, Va. from 4:30-7:30 p.m. and July 18 at Bland High School in Rocky Gap from 4:30 p.m.-7:30 p.m.

Return to Top

Congress

E&E Daily

June 19, 2019
PIPELINES

Industry hits back on Democratic safety bill

Jeremy Dillon, E&E News reporter

Industry advocates and at least one leading Republican are pushing back against central changes proposed by House Democrats in draft legislation to reauthorize the nation's pipeline safety regulators.

The criticisms, mainly offered in prepared testimony planned for an Energy and Commerce subcommittee hearing this morning, may offer a preview of the flashpoints between Senate Republicans and House Democrats as they negotiated a reauthorization for the Department of Transportation's Pipeline and Hazardous Materials Safety Administration ahead of a Sept. 30 deadline.

"It's disappointing. It's partisan. And I hope it's not where we end up," Energy and Commerce's top Republican, Rep. Greg Walden of Oregon, told E&E News. "Our teams have been working really well together, so it's a bit of a surprise when we saw the draft."

"But you know, it's all right; hopefully, we'll have a discussion and get to a better place," he added.

House Democrats last week unveiled their four-year reauthorization discussion draft meant to kick off the legislative process for the PHMSA update.

The bill would set funding levels at approximately $237 million in fiscal 2020, rising to about $255 million in fiscal 2023 (E&E Daily, June 18).

Much of the Democrats' vision for the process has been influenced by high-profile incidents, like the Merrimack Valley explosions in Massachusetts, where one person died and 21 were injured.

"We owe it to ... all the victims of pipeline explosions to ensure we are doing everything possible to enhance pipeline safety in this country," Energy and Commerce Chairman Frank Pallone (D-N.J.) and Energy Subcommittee Chairman Bobby Rush (D-Ill.) said in a joint statement last week.

One of the draft bill's main themes focuses on ensuring greater enforcement and penalties on operators that fail to follow the law.

The bill would remove the limit on total penalties in current law, set at $2 million, and alter the criminal penalty standard by changing the wording from "knowingly and willfully" to "knowingly or recklessly."

The legislation would also return an individual's ability to file a civil action against PHMSA to compel the agency to carry out its statutory obligations, Democrats said.

For the industry, those changes go above and beyond what is necessary. Current standards have worked as deterrents, companies said, with federal prosecutors successfully using them to punish pipeline violations.

And the Democrats' proposal may even lead to more dangerous scenarios for fear of harsh punishment, Christina Sames, vice president of operations and engineering services with the American Gas Association, said in prepared testimony.

"A bedrock of enhancing safety throughout the industry is the promotion of a culture that encourages self-disclosure and self-reporting," Sames said, noting that a change "may chill such self-reporting and be counterproductive to further developing a strong safety culture."

Pipeline boosters also took issue with language directing changes to assessment requirements and maximum allowable operating pressure regulations by eliminating a grandfather clause that exempted some pipelines built before 1970 from additional testing.

Those changes would run counter to PHMSA's pending gas transmission safety rules and multiple years of Gas Pipeline Advisory Committee (GPAC) recommendations, C.J. Osman, director of operations, safety and integrity with the Interstate Natural Gas Association of America, said in his prepared testimony.

"For example, while spike testing is an important assessment tool for certain pipes that are susceptible to time-dependent cracking, spike testing is not relevant to confirming maximum allowable operating pressure," Osman said.

"Such a broad application of spike testing would be destructive to our nation's natural gas pipeline infrastructure and contradicts the GPAC's recommendations for the pending PHMSA rules," he added.

Industry representatives took issue with the Democratic proposal to eliminate the cost-benefit requirement at PHMSA for regulations.

Some have argued that the analysis has slowed the agency's ability to issue standards in a timely manner — a complaint sure to come up from Democrats during today's hearing.

PHMSA still has 14 unresolved mandates from Congress from previous authorization bills, according to the PHMSA website.

Democrats dubbed the cost-benefit analysis "duplicative" in a memo outlining the draft bill's provisions.

Andrew Black, president and CEO of the Association of Oil Pipe Lines, said in prepared remarks that such review can determine whether a rule is needed.

"Cost/benefit analysis improves the quality of regulations," Black said. "Regulations that cannot justify their costs are often overly broad, imposing burdens on low-risk activities, making them wasteful and diverting resources away from higher needs."

Twitter: @JeremyDillonDC Email: jdillon@eenews.net

Return to Top

E&E Daily
June 19, 2019
APPROPRIATIONS

Dems weaponize spending bills on energy, environment

Nick Sobczyk and George Cahlink, E&E News reporters

Senate Majority Leader Mitch McConnell (R-Ky.) has dubbed himself the legislative "grim reaper," vowing to stifle House leadership's entire legislative slate, but Democrats are looking to a well-worn playbook to return fire.

With the Senate brick wall ahead of them, House Democrats are using the appropriations process to press their environmental agenda and weaponize GOP climate views that they see as out of sync with the mainstream.

As the House continues considering two packages of fiscal 2020 spending bills this week, Democrats are allowing floor votes on amendments, in part to frame Republicans as extreme and push back on the Trump administration's energy and environmental policy, particularly pulling out of the Paris climate agreement.

Both parties have used the spending process in recent years to feed their base and take swipes at the opposition, and both see appropriations amendments and riders as an especially important tool in divided government.

For the current House majority, that means voting on the issues major environmental organizations have put into focus for the party: keeping the United States in the Paris accord, fighting for climate and clean energy research dollars, and blocking what they see as anti-environmental development.

In one example yesterday, Democrats shot down four GOP amendments — some of them redundant — that would have blocked funding for various U.N. climate initiatives and stripped language in the State Department spending bill aimed at keeping the United States in the Paris Agreement (see related story).

Republicans asked for recorded votes on the amendments, approved for debate by the Democratic-controlled Rules Committee, often seen as a proxy for leadership's views.

Its chairman, Rep. Jim McGovern (D-Mass.), said it is to his party's advantage that more people see Democrats as committed to climate science and the GOP as opposed to it.

"I think Republicans are on the wrong side of history when it comes to climate change, but if they want to bring these awful amendments to the floor, I will work with them to bring them up and then defeat them — hopefully soundly," he said.

The language that remains in the State and Foreign Operations bill mirrors the "Climate Action Now Act," H.R. 9, the pro-Paris measure that passed the House along largely partisan lines but was immediately blocked by McConnell.

Like other Democratic riders peppered throughout the two omnibus packages working their way through the

House, the Paris language could easily be nixed as negotiations move through the Senate.

But as far as Democratic leadership is concerned, the House can have an up-or-down vote on the Paris Agreement over and over again. It sees the Republican amendments as self-defeating offerings from a GOP conference that's still highly divided on climate.

"To some extent, every chance we have to spike the football against what Trump has done on Paris is a good thing," Rep. Jared Huffman (D-Calif.) told E&E News.

'Heck of a coalition'

Republicans have already proposed other red-meat amendments to the Interior-EPA title on the second so-called minibus package, set to clear the House by the end of next week, that would block implementation of the Obama-era Clean Power Plan and methane rule.

It's not clear whether they will get consideration on the floor, but if the Rules panel allows them to come up for a vote, they would likely go down with a similar effect.

Meanwhile, Democrats are pushing their own proposals to get the GOP on the record. One amendment expected for a vote tomorrow would aim to block the Pebble mine in Alaska by prohibiting funds for the Army Corps of Engineers to finalize the environmental impact statement.

Huffman, who sponsored the amendment, said it will be the first time Congress has formally weighed in on the controversial project after years of legal sparring between industry and environmental groups. He noted that environmental and Alaska fishermen's groups are pressing members to support the measure.

The League of Conservation Voters is circulating a letter to members asking them to vote for the measure, while on the other side, the Competitive Enterprise Institute has put out statements of opposition.

For now, Huffman thinks he'll get enough Democrats to support the measure for it to pass, even if the caucus isn't unanimous.

"I don't know about all Democrats, but I think we've got a heck of a coalition here," he said. "I know that a lot of the outside groups are really fired up."

More generally, House Speaker Nancy Pelosi (D-Calif.) said Democrats are putting spending bills on the floor that reflect "our values to meet the needs of American people," and rank-and-file members, particularly her allies, appear to agree.

Rep. Kathy Castor (D-Fla.) said that although the Energy and Commerce Committee will look to move other energy legislation, including an energy infrastructure measure and various efficiency bills, appropriations is an important piece of the messaging puzzle.

"Look at these appropriations bills as they all move through," Castor, who sits on Energy and Commerce and chairs the Select Committee on the Climate Crisis, told reporters last week. "We're going to try to highlight all of the climate policies that are contained there, too."

'I'll have this debate all day long'

If there's any fear that the amendment votes will bubble back up in messaging wars or on the campaign trail, most Republicans aren't showing it.

For one thing, it could all be a moot point in the Senate, where appropriators are waiting on a broader budget deal to even begin considering their fiscal 2020 bills and where the GOP will have more power to block the Pebble and Paris language.

Senate lawmakers struck a deal to limit riders and expedite spending bills last year, but without a top-line number, the outlook for the policy provisions coming out of the House is hazy.

"What we proved last year is if you have an agreement on most riders not being in the bill, you can accomplish things," said New Mexico Sen. Tom Udall, the top Democrat on the Senate Interior and Environment Appropriations Subcommittee. "But what we seem to be proving this year is if you don't have a number, you're just stalemated in deadlock."

On the House side, Rep. David Joyce of Ohio, the top Republican Interior-EPA appropriator who tends to be more in line with his party's moderates, was skeptical of offering the climate amendments, but hard-liners — and even some Republicans who nominally accept climate science — appeared ready for the debate.

Rep. Paul Gosar (R-Ariz.), the conservative chairman of the Western Caucus, said he will continue to offer

amendments to spending bills seeking to reverse Democratic climate policy.

"We may lose some Republican moderates, but we are not going to stop saying it," said Gosar, a leading denier of man-made climate change.

Republicans, of course, have their own experience with environmental riders and funding prohibitions from their time controlling the House.

"They would actually play politics with the amendment process?" Rep. John Shimkus (R-Ill.), a senior Energy and Commerce member, joked when asked about the climate amendments being offered by Republicans this year.

The GOP for years included a clause in its State Department spending bill that blocked money for the Green Climate Fund, as well as a provision that stifled Obama-era restrictions on investments in overseas coal-fired power plants by the Overseas Private Investment Corp., the Export-Import Bank of the United States and the World Bank.

Republicans also attempted to use appropriations bills to target various other Obama initiatives, including EPA's Clean Water Rule and protections for sage grouse and prairie chickens.

Some of those ideas have returned this year to be rejected by Democrats in one form or another. But many Republicans were unfazed with Democrats moving in the opposite direction, and some welcomed the chance to debate what they see as no-brainer policy positions or easy political fodder for their own base.

"I'll have this debate all day long," climate select committee ranking member Garret Graves (R-La.) said of the Paris Agreement. "I can't believe that people would go out there and say that this is good."

Graves is a vocal critic of the agreement, and on the select committee, he has helped shape his party's views on climate change, often acknowledging the role of man-made emissions but talking up natural gas and touting reductions over the last 20 years.

Shimkus added that GOP lawmakers were not being told how to vote on the amendments, noting that members could benefit from the votes in different ways based on the makeup of their districts.

"It may brandish their credentials with more liberal green activists in their districts," he added. "And there are some districts where constituents aren't happy about you being more moderate in this discussion."

But although the debate won't hurt them, Republicans need to be clear in explaining why they are offering the policies rather than allowing Democrats to define them, said Rep. Jeff Duncan (R-S.C.), an Energy and Commerce member who co-sponsored one of the Paris Agreement amendments that got a vote last night.

"The Republicans need to be very clear on what they are trying to do and how they feel about climate change in general," Duncan said. "We can say the Earth is changing. But is man responsible for it? And do things like the Paris climate accord make a difference when some of the Earth's biggest polluters aren't adhering to it?"

Republicans have slowly abandoned some of those talking points in recent months, particularly some of their more misleading lines that stress uncertainties in climate science. But only a handful crossed party lines to keep the Paris language in.

And for lawmakers like Joyce, it may not be the right forum. "I am all for having a discussion about climate change," Joyce said. "I just don't know if the appropriations process is the place to be doing it."

Twitter: @nick_sobczyk Email: nsobczyk@eenews.net

Return to Top

The Energy Daily
June 19, 2019

House Democrats float one-year PTC extension, but no storage incentive

BY ERIC LINDEMAN

A senior Democrat on the House Ways and Means Committee Tuesday proposed legislation that would extend the renewable energy production tax credit for one more year—less than a previously rumored three-year extension—and it did not include an investment tax credit for energy storage, despite broad bipartisan

support for the technology.

Congressional Republicans are likely to oppose the extension of the PTC, which is due to expire at the end of the year, eliminating a critical subsidy for wind farms worth 2.5 cents per kilowatt-hour of electricity produced. Many GOP lawmakers complain wind energy is a mature technology that no longer should be subsidized by taxpayers, and that the PTC unfairly tilts energy markets against coal, nuclear and other conventional power plants.

House Democrats had indicated they would propose a new investment tax credit (ITC) for storage in legislation to be taken up by the Ways and Means Committee this month to extend tax credits that expired last year. Democrats and the Trump administration have both emphasized the key role of storage in bolstering the reliability and cost-effectiveness of the nation's grid as more intermittent renewables come on line.

But in introducing the tax extender legislation, Rep. Mike Thompson (D-Calif.), chairman of the Ways and Means Select Revenue Measures Subcommittee, provided no statement explaining Democrats' decision on storage or anything else in the bill, although the hefty cost of a storage ITC might have been a deterrent.

The bill does extend credits for what the American Council on Renewable Energy (ACORE) called "orphan" renewable technologies—those for which tax credits have already expired. Many of those are related to biofuels production.

ACORE President and Chief Executive Officer Gregory Wetstone was clearly underwhelmed by the Democrats' initial tax "extender" bill.

"The House Ways and Means Committee extenders mark is a modest start to a really important near-term opportunity," he said in a statement.

"While an extra year of the wind PTC and renewal of the orphan renewable technologies are to be welcomed, this year's extenders process should not conclude without the inclusion of a tax credit for energy storage and other critical measures to help combat climate change and decarbonize the grid."

The renewable energy tax extenders are tucked into the "Taxpayer Certainty and Disaster Tax Relief Act" in an apparent effort by House Democrats to capitalize on strong Capitol Hill support for federal aid to numerous storm-ravaged areas.

The bill, which is to be marked up by Thompson's subcommittee Thursday, appears likely to pass the Democratic-controlled House, but is sure to face significant opposition in the Republican-controlled Senate.

Sen. Chuck Grassley (R-Iowa), chairman of the Senate Finance Committee, last week spoke out strongly against rumored efforts of Democrats to pay for extension of the PTC and ITC, which mainly benefits the solar industry, by rolling back 1 percent of the Trump and GOP corporate tax cut.

"If press reports are true, this proposal is a non-starter," Grassley and Rep. Kevin Brady (Texas), ranking Republican on the House Ways and Means Committee, said in a June 11 joint statement.

Both the PTC and ITC are being phased out under bipartisan legislation passed in December 2015. While the PTC expires at the end of 2019, the ITC for utility-scale solar drops to 26 percent in 2020, 22 percent in 2021, and then to a permanent 10 percent starting at the end of 2022.

The PTC has been in place since 1992 and was initially set to expire in 1999.

Return to Top

E&E NewsPM
June 18, 2019
TAX POLICY

House Democrats unveil 3-year extenders package

Geof Koss, E&E News reporter

The House Ways and Means Committee on Thursday will mark up legislation that would extend for three years an assortment of expired or soon-to-be-expired energy incentives.

The package (H.R. 3301), released today by Ways and Means Subcommittee on Select Revenue Measures

Chairman Mike Thompson (D-Calif.), would apply retroactively for 2018, while pushing the new expiration date for most credits to 2020.

While there are technical changes to a handful of credits, the package appears to avoid major revisions sought for months by an assortment of advocates and industry sectors, including breaks for energy storage and electric vehicles (E&E Daily, April 11).

However, the bill would extend for one year the production tax credit for wind — scheduled to expire at the end of the year under a 2015 tax deal that phased down its value. Thompson's bill allows wind facilities that commence construction in 2020 to qualify for 60% of the credit's value.

The bill also revives the PTC for a host of other renewable sources that have not qualified for the break since the end of 2017. That provision was welcomed by the National Hydropower Association, which said it was "very pleased" to see extensions for hydropower and marine energy included in Thompson's bill.

"Uncertainty regarding the status of the credits has stalled project deployments along with the energy, climate and jobs benefits that come with them," said Jeff Leahey, NHA's executive vice president for governmental affairs, in a statement.

Other groups made clear they'll continue to push for additional provisions to be included, which could happen during Thursday's markup.

"The House Ways and Means Committee extenders mark is a modest start to a really important near-term opportunity," said Gregory Wetstone, president and CEO of the American Council on Renewable Energy, in a statement. "While an extra year of the wind PTC and renewal of the orphan renewable technologies are to be welcomed, this year's extenders process should not conclude without the inclusion of a tax credit for energy storage and other critical measures to help combat climate change and decarbonize the grid."

In addition to energy incentives, the new bill also reinstates per-ton excise taxes on coal to fund a black lung liability trust fund, as well as a per-barrel excise tax on crude oil that funds the Oil Spill Liability Trust Fund. It also includes tax provisions to help states and territories recover from natural disasters.

While there's bipartisan appetite in the Senate for taking on extenders, the House's proposal to pay for the extensions by changes to the estate tax included in the GOP tax overhaul of 2017 remains a hurdle. Republican tax writers have made clear they will oppose changes to that law.

Twitter: @geofkoss Email: gkoss@eenews.net

Return to Top

S&P Global
June 18, 2019

US House Democrats propose 1-year extension to wind energy tax credit

By Molly Christian Market Intelligence

Democrats in the U.S. House of Representatives introduced legislation June 18 that would extend a soon-to-expire federal production tax credit for wind energy by one year.

Renewable energy proponents hope that lawmakers include more incentives for the industry as the legislation moves forward.

H.R. 3301, the Taxpayer Certainty and Disaster Relief Act of 2019, would prolong the wind power credit at its current rate by one year to projects that start construction before Jan. 1, 2021. The proposal from the House Committee on Ways and Means would also extend certain expired tax credits and provide disaster relief.

In late 2015, congressional lawmakers agreed to phase out the wind energy credit over five years to facilities to that begin construction before the start of 2020, resulting in a 60% reduction for projects started in 2019 and a complete elimination for projects started in 2020. But House Democrats have said that the Trump administration's efforts in recent years to repeal or weaken environmental rules for the power sector and withdraw the U.S. from the Paris Agreement on climate change have altered the market conditions under which they signed the 2015 deal.

In addition to prolonging the wind credit, H.R. 3301 includes three-year retroactive extensions to expired

production tax credits for new open- and closed-loop biomass energy facilities, geothermal energy plants, landfill gas facilities, electricity production facilities using municipal waste, qualified hydropower projects, and marine and hydrokinetic renewable energy facilities. Production tax credits for those projects would be extended to those that begin construction by Jan. 1, 2021.

The bill would also prolong credits for biodiesel and renewable diesel, nonbusiness energy property and energy-efficient commercial buildings.

'A modest start'

Despite its support for wind power, H.R. 3301 drew a muted response from renewable power groups, in part because the legislation would not allow more energy storage projects to qualify for a federal investment tax credit.

The American Council on Renewable Energy's CEO, Gregory Wetstone, called the bill "a modest start" and welcomed its extension of the wind energy credit and revival of expired renewable power incentives. The extenders process for 2019 "should not conclude without the inclusion of a tax credit for energy storage and other critical measures to help combat climate change and decarbonize the grid," Wetstone said.

Meanwhile, the main U.S. wind power trade group called for more equal treatment for various clean energy resources. "As Congress considers clean energy tax policy, we encourage parity between technologies to boost competition and meet consumer demand for clean energy at the lowest possible cost," said Bree Raum, vice president of federal affairs for the American Wind Energy Association.

Outlook

The House Ways and Means Committee has scheduled a June 20 markup of H.R. 3301, after which the bill could head to the full House.

But the legislation's fate in the U.S. Senate is less clear. The Senate Committee on Finance's tax extenders bill released in February contained two-year retroactive extensions to the expired credits that the House bill proposed to prolong. But the Senate bill would not sustain the wind production tax credit after 2019.

During an interview in May, U.S. Sen. Chuck Grassley, R-Iowa, who chairs the Senate Finance Committee, said he already agreed in 2015 to phase out the wind credit, and "I don't think it'd be right for me to ask for any more."

But the committee recently convened several working groups to focus on tax extenders. Those task forces could look at the broader issue of renewable energy incentives and potentially consider lengthening credits for certain resources. A spokesperson for the Senate Finance Committee did not immediately return an email concerning the House tax extenders bill and potential recommendations from the Senate working groups.

Return to Top

EnergyWire
June 19, 2019
ENERGY POLICY

Renewable leaders on tax credits: 'Let them phase down'

David Iaconangelo, E&E News reporter

Renewable advocates said yesterday they are shifting their focus onto energy storage tax credits, even as Congress weighs extension of a key financial incentive for wind.

At the same time, they warned of an uncertain future for renewable power generation at a summit for investors sponsored by the nonprofit American Council on Renewable Energy (ACORE) in New York.

"I hear a lot of people saying this is maturation of the sector, and I guess in some ways it is," said Greg Wetstone, president and chief executive of ACORE. "I will point out that our colleagues in the fossil sector have never reached this level of maturity. It's a maturity that is unique to us that we grow beyond our tax credits."

For wind, production tax credits are currently set to expire for new projects after this year, and after 2021, the investment tax credit for large-scale solar investment will phase down to 10%.

House Democrats released an extenders package that would prolong the production credit for wind by one

year, but it lacked provisions for solar or storage (E&E News PM, June 18).

Kathy Weiss, vice president of government affairs for manufacturer and developer First Solar, said renewable industries should move on from pursuing wind and solar credits.

"We really have to get over the ITC and PTC," she said. "Let them phase down, and let's have market certainty around them and make sure that whatever the next real policy is, it's a sustainable policy."

ACORE's executives have said securing an investment tax credit for storage is a top priority.

"Everything we see suggests that a storage tax credit could unleash so much growth and really transform the grid," said Wetstone.

Several bills introduced in Congress, including the bipartisan "Energy Storage Tax Incentive and Deployment Act," would make storage technology eligible for incentives.

The idea stands a shot of convincing lawmakers because a credit would be relatively inexpensive, given the low levels of deployment, said Weiss.

Storage also is tied for first with utility-scale solar as the most attractive opportunity for investment through 2022, according to a survey of top financial executives released as part of a financing report from ACORE.

Storage technologies were likely to follow renewable power into the energy mainstream, although the lack of a standardized approach to project financing and the absence of tax credits have slowed its progress, the group said.

Renewable financiers are optimistic about growth over the next three years, too, partly because of state renewable portfolio standards and growing demand from the corporate sector.

There are changes brewing, though. Ted Brandt, chief executive at Marathon Capital, said renewable investment is shifting toward solar — whose credits will shrink but not phase out completely — and away from onshore wind.

"We're seeing much more of an emphasis on solar," he said.

The ACORE report added that investors are conveying "confidence" to 2022, but "further out to the critical period between 2022 and 2030, the expected rate of growth is less certain."

Himanshu Saxena, chief executive of Starwood Energy Group, said he thinks the price of renewable electricity purchased via long-term agreements — a favorite contract type for corporations — will stop falling when credits are phased down.

"We see an upward pressure for [power purchase agreement] pricing coming in 2020," he said.

Twitter: @diaconangelo Email: diaconangelo@eenews.net

Return to Top

E&E Daily
June 19, 2019
AGENDA

Lawmakers introduce a bevy of energy, environment bills

Philip Athey, E&E News reporter

Lawmakers late last week introduced a bevy of bills concerning energy, environmental and regulatory issues in both the House and Senate.

Sens. Chris Coons (D-Del.), Jerry Moran (R-Kan.) and 10 other co-sponsors introduced S. 1841, which aims to even the playing field between renewable energy companies and the oil and gas industry when it comes to the tax code.

"Clean energy technologies have made tremendous progress in the last several decades, and they deserve the same shot at success in the market as traditional energy projects have experienced through the federal tax code," Coons said in a press release.

The bill would allow renewable energy production and storage firms to form master limited partnerships (MLPs).

MLPs are taxed as a partnership but are allowed to trade stock on the market as if they were a corporation. Currently, only oil, natural gas, coal extraction and pipeline companies are allowed to operate as MLPs.

S. 1837, introduced by Sen. Kirsten Gillibrand (D-N.Y.), would create a $5 billion grant program to help cities, states and tribes renovate their water systems. Rep. Antonio Delgado (D-N.Y.) has a House version.

"Too many communities in New York and across the country have water pipes that are old and leaking, lack sewer systems, and have outdated technology that isn't doing a good enough job of providing clean drinking water to their residents and of keeping wastewater from polluting the environment," Gillibrand said in a press release.

"This will help ensure that our communities have the resources they need to rebuild broken water systems and to provide reliable sources of water for generations to come," she added.

Sen. Amy Klobuchar (D-Minn.) introduced S. 1864 with co-sponsors Sens. Tina Smith (D-Minn.), Jeff Merkley (D-Ore.) and Michael Bennet (D-Colo.) to require the government to determine the level of greenhouse gases associated with proposed federal projects.

Klobuchar said the bill would help American companies that often have a better track record with greenhouse gas production than foreign firms competing when bidding for government contracts.

"American-made goods are often produced more sustainably than foreign-made materials, but those green practices aren't taken into account when bidding for government contracts," she said in a press release.

"Our legislation will help manufacturers here at home that have proven their dedication to fighting climate change by giving federal agencies the information to take those efforts into consideration during the bidding process, creating new opportunities to fight climate change and reduce emissions across global supply chains."

The bill is supported by the Sierra Club, which called it "a strong step towards enacting 'Buy Clean' standards."

"We cannot afford for the government to buy billions of dollars worth of goods without knowing whether they support good jobs and climate solutions, or further fuel the climate crisis," said Melinda Pierce, the Sierra Club's legislative director, in the press release.

Separately, Rep. Elaine Luria (D-Va.) introduced a House companion bill to Sen. Lisa Murkowski's (R-Alaska) S. 903, which aims to encourage the growth of the nuclear energy sector (E&E Daily, April 29).

Other bills introduced were:

H.R. 3297, by Reps. Francis Rooney (R-Fla.) and Marcy Kaptur (D-Ohio), to require the National Centers for Coastal Ocean Science to continue monitoring harmful algae bloom, even if the government is shut down.

S. 1840, by Sens. Deb Fischer (R-Neb.), Tammy Duckworth (D-Ill.), John Thune (R-S.D.), Joni Ernst (R-Iowa) and Chuck Grassley (R-Iowa), to set a hard deadline for small oil refineries to petition EPA for a renewable fuel standard hardship exemption.

S. 1848, by Sen. Roger Wicker (R-Miss.), to make electrochromic glass eligible for energy tax credits. The glass adjusts its tint based on the amount of light hitting it, lowering the energy needed to cool a building. Rep. Steven Horsford (D-Nev.) has a House companion.

S. 1849, from Rep. Martha McSally (R-Ariz.), to prevent forest fires in Arizona by directing the Forest Service to work with industry to speed up the forest thinning process in Arizona.

H.R. 3282, by Rep. Grace Meng (D-N.Y.) and a dozen co-sponsors, to authorize the creation of a prize competition for the research, development or commercialization of carbon-capture technology.

H.R. 3258, by Rep. Gus Bilirakis (R-Fla.) and co-sponsored by Florida Reps. Al Lawson (D), Rooney, Ross Spano (R) and Ted Yoho (R), to direct the Government Accountability Office to perform consistent reviews of the flood insurance rates and the rate maps under the National Flood Insurance Program.

H.R. 3269, by Rep. Josh Gottheimer (D-N.J.) and co-sponsored by Reps. Rodney Davis (R-Ill.), Ron Kind (D-Wis.) and Yoho, to authorize the creation of a commission with the goal of identifying unneeded or overly burdensome regulations that would be presented to Congress for removal on a simple yes or no vote.

S. 1856, by Sen. Martin Heinrich (D-N.M.), to ban neonicotinoids, a class of insecticides chemically similar

to nicotine, from use on national wildlife refuges.

S. 1874, by Sen. Gary Peters (D-Mich.) and co-sponsored by Sen. Ron Johnson (R-Wis.), to require the government to buy the most efficient lightbulbs on the market.

Twitter: @philipathey1 Email: pathey@eenews.net

Return to Top

Other Agencies

S&P Global
June 18, 2019

US EPA to issue final carbon rule for existing coal-fired power plants

By Zack Hale Market Intelligence
The U.S. Environmental Protection Agency is poised to issue the final version of its regulation targeting carbon dioxide emissions from existing coal-fired power plants — dubbed the Affordable Clean Energy, or ACE, rule — June 19.

EPA Administrator Andrew Wheeler will make "a major policy announcement" that day at the agency's headquarters in Washington, D.C., according to a press advisory. Multiple media outlets have reported that the EPA plans to finalize the ACE rule June 19, citing unnamed sources in the Trump administration.

The ACE rule is intended as a scaled-back replacement for the Obama-era Clean Power Plan, which sought to cut greenhouse gas emissions from existing fossil fuel-fired power generators using a systemwide approach.

Issued under Section 111(d) of the Clean Air Act, the Clean Power Plan assigned states individual emission-reduction goals. To meet those targets, states were allowed to adopt a combination of compliance measures, including efficiency upgrades at coal-fired plants as well as a broader shift away from coal-fired generation toward cleaner sources of energy such as renewables and natural gas.

A coalition of coal-heavy states and electric utilities immediately challenged the Clean Power Plan when it was finalized in 2015, arguing that the EPA had overstepped its authority. The U.S. Supreme Court stayed the regulation in 2016 before it could take effect, and the U.S. Court of Appeals for the District of Columbia Circuit paused further litigation over the matter while the Trump administration works to finalize a replacement.

The U.S. utility sector has already complied with the Clean Power Plan's overall emission reductions goals, according to the Edison Electric Institute.

'Inside the fence line'

In August 2018, the EPA unveiled its proposed ACE rule, which uses a narrower, "inside the fence line" interpretation of the agency's authority to regulate CO2 emissions from existing power plants. In contrast to the sweeping Clean Power Plan, the ACE proposal does not include any specific emission reduction targets for states.

The EPA nevertheless estimated that full implementation of the ACE rule would lower power-sector carbon emissions by 33% to 34% from 2005 levels, exceeding the Clean Power Plan's estimated 32% decline from 2005 levels by 2030. However, virtually all of those reductions would come from a nationwide shift away from uneconomic coal plants toward cheaper natural gas-fired and renewable generation.

States would have three years from when the EPA finalizes its guidelines for the rule to prepare and submit plans that include unit-specific standards of performance based on the potential for efficiency gains.

Academic researchers have estimated that on-site efficiency upgrades could actually lead to increased

emissions in some states by prompting more coal units to operate or some plants to run more frequently, causing a "rebound effect." The ACE proposal could increase carbon output in 2030 by up to 8.7% in 18 states plus the District of Columbia compared to no policy, an analysis published in the January edition of the peer-reviewed journal Environmental Research Letters found.

The original version of the new rule proposed to change the Clean Air Act's New Source Review, or NSR, program, which requires older generators to install the latest pollution controls when the units are modified in ways projected to result in a significant emissions increase. Some observers expect the final ACE rule to discard those changes in an effort to mitigate legal risk.

"Based on what we've been hearing, it appears the New Source Review elements of the proposal will likely not be part of this final rule but will be reserved for some later document," former Obama administration air regulator Janet McCabe said on a June 17 conference call.

The agency will also reportedly include multiple cost-benefit analyses in the proposal, one of which assumes that no further public health benefits can be gained by reducing fine particulate matter, or PM 2.5, pollution below the level set under the National Ambient Air Quality Standards, or NAAQS. In issuing the Clean Power Plan in 2015, the EPA estimated it would yield between $14 billion to $34 billion in health benefits by 2030.

The Trump EPA's own regulatory impact analysis for the ACE proposal estimated that the regulation could cause up to 1,400 additional deaths annually compared to the Clean Power Plan due to a relative increase in PM 2.5 pollution tied to greater coal-fired generation. The agency's alternative cost-benefit analysis assumes that PM 2.5 exposure below the level set under the NAAQS is safe, effectively eliminating the 1,400-death difference between the two proposals.

Return to Top

Energynews.us
June 19, 2019
GRID

Utilities worry big tech's bandwidth grab could interfere with grid communication

WRITTEN BY David Thill

Utilities don't want your smart home to interfere with the smart grid.

The power industry is lining up against a Federal Communications Commission proposal that would let tech companies sell devices that send and receive data using a part of the radio spectrum currently used to manage the electric grid.

The change, utility officials say, would increase the risk of interference at a time when data from smart meters and digital sensors play an increasingly integral role in grid operations.

At issue is a chunk of frequencies known as the 6 gigahertz band. Like lanes on a highway, wireless signals travel on different spectrum bands. Utilities, public safety agencies, commercial wireless carriers and other organizations are licensed by the FCC to use the 6 GHz band.

"Utilities see this band as mission-critical," said Robert Thormeyer, spokesman for the Utilities Technology Council. "Any interference to those transmissions degrades the integrity of the data being sent."

Not all frequency bands require individual licenses to access. Wi-Fi currently resides on an unlicensed band near the 6 GHz band. A group of large tech companies, including Apple, Google, Facebook and Microsoft, want the FCC to expand the spectrum allowed for use by Wi-Fi internet connections to include the 6 GHz band.

Supporters of the proposed rule say that internet traffic on unlicensed spectrum is growing exponentially, and opening the 6 GHz band for Wi-Fi use will expand low-cost customer internet access while promoting development of more wireless technology.

Utilities and other licensed users of the 6 GHz spectrum band say if the FCC opens it up for unlicensed use, critical communications are more likely to be interrupted by people or businesses connecting to the internet

through Wi-Fi. And since it's unlicensed, they argue it will be more difficult to trace interruptions and fix them, potentially jeopardizing electric service and public safety.

"There has not been a lot [of spectrum] allocated for critical infrastructure like utilities," said Stewart Kantor, CEO of Ondas Networks, a wireless network developer. The more the FCC opens up licensed spectrum for unlicensed use, "the more vulnerable they make those networks that are relying on it."

Thormeyer acknowledged that the risk of interference is low. But he said interference can cause major problems for utilities, disrupting their ability to monitor vital equipment. For example, sensors on power lines communicate the status of the lines and shut them off when there's a fault so minor problems don't escalate. Interference could prevent that communication from getting through. "Utilities want to take out any risk at all," he said.

Utilities started using the 6 GHz band during the 1990s after the FCC relocated them from another spectrum band to make room for other industries, Thormeyer said. This meant utilities had to invest in new equipment capable of reaching the 6 GHz band, he said.

He said the proposed change could force utilities to migrate again to another part of the spectrum. Some utilities have reported it could take them a decade to migrate and cost them $50 million to $100 million, but that depends on their size and location, Thormeyer said. "It's a challenge that seems to be lost on the FCC at this moment."

Tech companies pushing for the change said in comments that technology exists to prevent interference with licensed users, though Thormeyer said the system is unproven.

Spectrum has been an issue at the FCC for many years, he said. Going forward, he added, organizations like the Utilities Technology Council want to see more coordination between the FCC and the Federal Energy Regulatory Commission, which regulates the utility industry at the national level. Meeting regularly could help the two agencies understand each other, Thormeyer said, especially as telecommunications becomes more important to the energy regulatory commission.

The FCC doesn't have a set date to rule, but Thormeyer said it appears the commission will move forward with the proposal to open the 6 GHz band for unlicensed use, possibly later this year or early next year.

If the FCC moves forward, "I think they have to proceed cautiously," Kantor, at Ondas, said. "The trade-offs are with the nation's infrastructure."

Return to Top

States

S&P Global Platts
June 18, 2019

SPP seeks commitments for energy imbalance market by late July

By Mark Watson

Market reaction to Southwest Power Pool 's plans to launch a market for Rocky Mountain West utilities to balance generation and load regionally in real time may become clearer by late July, but at least one industry observer sees the proposal as "an improvement on the status quo."

Utilities will not have to become members of the SPP regional transmission organization to participate in SPP 's proposed Western Energy Imbalance Service market . SPP plans to centrally dispatch energy from participating resources throughout the region every five minutes in order to efficiently enhance the reliability of electricity delivery in the region.

Since September, SPP has been working to take on the reliability coordinator role for utilities now served by Peak Reliability in nine states: Arizona , Colorado , Montana , Nebraska , New Mexico , South Dakota , Texas , Utah and Wyoming . Peak Reliability announced last July that it planned to wind down its role as RC for most of the Western Interconnection at the end of 2019.

"We expect to receive the most interest from the region where we'll also be providing RC service beginning

at the end of this year, but we will entertain any and all customers interested in participating in the WEIS," SPP spokesman Derek Wingfield said Tuesday.

Scott Miller, Western Power Trading Forum executive director, said an energy imbalance market "is an improvement on the status quo."

"I think it will get everyone used to the idea of working together despite the fact that there are many different business models at work in the Mountain West area: federal power, [investor-owned utility], public power, etc.," Miller said in an email Tuesday. "As a friend … told me, this diversity of business models has been one of the challenges of getting a market started in the West."

SPP launched its own real-time Energy Imbalance Market in 2007, eventually supplementing it with a day-ahead market and Transmission Congestion Rights market in 2014.

SPP 's Wingfield said the organization has asked customers interested in participating in the new WEIS market "to indicate their commitment by the end of July." SPP plans to add more market participants at six-month intervals after the initial launch, Wingfield said.

Enough resources, loads

One key issue in the success of the WEIS market and a possible successor that would act as a regional transmission organization "is whether enough load, generation and transmission joins the WEIS to make it viable as a possible next step: an RTO," the WPTF's Miller said.

The Western Area Power Administration , a federal agency that sells and delivers power across 15 central and western states, "clearly wants" an RTO to serve the region, Miller said.

"Perhaps an RTO can be formed having SPP has market administrator – later – as a separate governance structure," Miller said. "We'll see. We also need to see how the state regulators react."

A new energy imbalance market may not have much of an effect on market outcomes and the relative advantages of generation and load-serving entities, Miller said.

"Given the mix of resources (thermal, wind , some solar) I don't think there will be much of a variability of price in the immediate term but we'll have to see how big the area of the area covered by the imbalance market ," Miller said. "On the whole, this is an interesting concept and one that may have a better chance of success given that this Mountain region has different policy objectives as well as different corporate and regulatory cultures than California and most of the [California Independent System Operator Energy Imbalance Market] areas."

Return to Top

S&P Global Platts
June 18, 2019

Western state climate policies seen adding complexity, benefits to EIM

By Kate Winston

As more states in the West pass new carbon policies, state regulators will need to figure out how to mesh those policies for participants in the Western Energy Imbalance Market without double counting emissions reductions from the electric sector, state officials said at an EIM forum Tuesday.

Some regulators raised concern that this complicated process could impact power costs in non-carbon policy states and erode fragile trust in the EIM. But a top California regulator said the growing roster of state carbon policies in the West could show the strengths of the EIM.

"The opportunities posed by all the new carbon policies that have been adopted is that if we do expand the EIM, we can implement those programs more affordably," said Clifford Rechtschaffen, a member of the California Public Utilities Commission .

California 's hurdles

California has an economy-wide cap and trade program that covers 80% of the state's greenhouse gas emissions , and it is a key part of the state's strategy to reduce GHGs 40% below 1990 levels by 2030. California also has a new law aiming to get 100% of its electricity from zero-carbon sources by 2045.

California has faced some hurdles accounting for emissions from electricity that is imported from other states through the EIM. In the last couple years both the California Air Resources Board and California Independent System Operator both have rolled out fixes to help address emissions leakage in the EIM.

Now regulators will need to figure out how the EIM will account for more state carbon policies in the West. Washington passed a law requiring 100% clean electricity by 2045, and New Mexico passed a measure requiring 100% zero carbon electricity by 2050. Meanwhile, Oregon ’s legislature has proposed an economy-wide cap-and-trade program that would reduce GHGs 80% below 1990 levels by 2050.

Regional challenges

State regulators outlined a number of questions about dealing with state carbon policies in the EIM. For instance, the potential expansion of Cal-ISO’s day-ahead market to the EIM will require different approaches to account for GHG emissions , said Ben Carrier from CARB.

Oregon ’s potential cap-and-trade program could link up with similar programs in California and Quebec . But even if there is no linkage on day one, California will have to figure out how to deal with Oregon ’s program through regulatory changes in California , said Rajinder Sahota from CARB.

Washington ’s policy allows the state’s plentiful hydro supplies to count toward its 100% clean standard, but more work is needed to ensure resources get full value for their clean energy without having their emissions reductions double counted under different state policies, said Glenn Blackmon from the Washington Department of Commerce.

Accounting for multiple state carbon policies in the EIM could create complexity, impact power costs in non-carbon policy states, and create opportunities to game the system, said Commissioner Jordan White, a member of the Public Service Commission of Utah . While the EIM has come long way in gaining trust in the region, it is still “a very tender time” in terms of development of the EIM, White said.

Carl Zichella from NRDC argued that the EIM has proved its worth and that is why entities participate in the market . The states with some of the highest electric load are aligning their climate policies and regional collaboration is a way to take advantage of the different resources in the West, he said. “We shouldn’t ignore the fact that there is a cost of not doing anything,” he said.

Return to Top

S&P Global
June 18, 2019

High retail electricity prices in New England states likely to continue RRA

By Dennis Sperduto Market Intelligence

The various states in the U.S. typically have differing costs of living, or COL; however, both before and after adjusting for COL, the New England states are among the highest-cost states for electricity in the country. Specifically, as detailed in table 1 below, New Hampshire, Rhode Island, Connecticut and Massachusetts have the four highest 2018 regulated retail electricity prices to ultimate customers after adjusting for COL, and Vermont and Maine are tied with New York for ninth highest. On an unadjusted basis, Massachusetts had the second-highest price of electricity nationwide, Connecticut the third, Rhode Island the fourth, New Hampshire the fifth, Vermont the eighth and Maine the ninth.

The analysis in this report is an extension of a recently published Financial Focus report, "Regulated Retail Price of Electricity: Average retail price per kWh falls in 2018 after a 2017 bump."

Moreover, a recent analysis by the Market Intelligence Power Forecasting Group, "New England's shrinking generation fleet could pressure forward capacity markets," notes that difficulties faced by gas-fired generation in the region suggest little price relief is ahead. For additional information, please see here.

Our attempt in this analysis is to provide insight into the degree to which each state's cost of electricity mirrors its overall COL.

Completing the top 10 COL-adjusted, highest-priced states are Hawaii, Michigan, California and Pennsylvania. We note that while their rankings changed modestly in terms of unadjusted prices, they were also among the higher-cost states. Interestingly, Hawaii was the highest-cost producer by a wide margin,

39%, on an unadjusted basis, while New Hampshire's prices on a COL-adjusted basis are only 5% greater than the next most expensive state, Rhode Island.

The cost of electricity to ultimate customers in each state as a percentage of the national average is provided in the fourth column of table 1. Also provided in table 1 are state electricity prices on an unadjusted basis; this data is part of the "Regulated Retail Price of Electricity" study.

To adjust the power prices for the cost of living in each state, we utilized 2018 data provided by the Missouri Economic Research and Information Center, or MERIC. According to MERIC data, the states with the highest COL are Hawaii, the District of Columbia, California, New York, Massachusetts, Maryland, Oregon, Alaska, Connecticut and Rhode Island, while those states with the lowest COL are Mississippi, Oklahoma, Arkansas, Missouri, Michigan, Alabama, Tennessee, Kansas, Indiana and Wyoming. For ease of presentation, we refer to the District of Columbia as a state in this report.

At the other end of the spectrum, the states with the lowest 2018 COL-adjusted prices of electricity to ultimate customers are Oregon, the District of Colombia, Louisiana, Texas, Utah, Arkansas, Wyoming, Oklahoma, Idaho and Tennessee. These states show some interesting changes in ranking in terms of unadjusted and COL-adjusted electricity retail price.

For instance, Oregon is middle of the road based on unadjusted price but is lowest on an adjusted basis due to its seventh-highest COL. The District of Columbia also merits comment. On an unadjusted basis, the District's electric price was 13th highest in the nation, though with the second highest COL, its COL-adjusted price of electricity is second lowest. The other eight states with the lowest COL-adjusted price of electricity all had quite low prices on an unadjusted basis. For instance, Arkansas, Texas and Louisiana had the three lowest unadjusted electricity prices and were third, fourth and sixth lowest, respectively, on a COL-adjusted basis. Utah, Wyoming, Oklahoma, Idaho and Tennessee were among the 10 lowest-priced states on both an unadjusted and COL-adjusted basis.

Description of methodology utilized

The methodology employed in this analysis utilized the statewide average price of electricity to ultimate customers as presented in the "Regulated Retail Price of Electricity" study. As previously noted, this data is not adjusted for COL. For each state, the average price of electricity was compared to the nationwide average of 10.81 cents per kilowatt-hour, and a resulting percentage was determined.

From MERIC data, a cost of living percentage relative to the U.S.'s average of 100% was obtained for each state. The percentage relative electricity price for each state determined above was divided by the percentage relative cost of living and the resulting measure was used to rank the states. This measure effectively presents the price of electricity in each state relative to the nationwide average adjusted for the relative cost of living.

The MERIC state cost of living index incorporates grocery, housing, transportation, utilities, health care and miscellaneous costs. The relative cost of living in each state compared to the U.S. average of 100.0 ranges from a low of 85.7 for Mississippi to a high of 190.1 for Hawaii.

Return to Top

EnergyWire
June 19, 2019

UTILITIES

PG&E to pay $1B for wildfire damages

Anne C. Mulkern, E&E News reporter

The largest utility in California will pay $1 billion to 14 local governments to cover wildfire losses, the first major settlement linked to a rash of recent catastrophic fires in the Golden State.

San Francisco-based Pacific Gas and Electric Co. agreed to pay city and county damages from last year's Camp Fire north of Sacramento, the 2017 North Bay Fires in California wine country and the 2015 Butte Fire in Amador County, east of Sacramento.

State investigations have blamed PG&E's downed power lines for igniting several devastating fires. The

utility is in bankruptcy reorganization as it faces as much as $30 billion in related damages.

"This is an important first step toward an orderly, fair and expeditious resolution of wildfire claims and a demonstration of our willingness to work collaboratively with stakeholders to achieve mutually acceptable resolutions," PG&E said in a statement.

The settlement will be incorporated into the utility's bankruptcy reorganization. The pact does not affect numerous fire claims filed by residents and businesses, said Baron & Budd, the Texas-based law firm representing the municipalities. The pact was negotiated by a mediator, with PG&E and several municipal agencies agreeing to various amounts that together total $1 billion.

The largest chunk of the money, $415 million, goes to nine municipalities near San Francisco: the cities of Clearlake, Napa and Santa Rosa, and Lake, Mendocino, Napa, Nevada, Sonoma and Yuba counties.

An additional $270 million will go to Paradise, the Butte County town destroyed by the Camp Fire, the deadliest and most destructive in state history. Another $252 million is allocated to Butte County.

The agreement also includes $47.5 million for the Paradise Recreation & Park District, $12.5 million for Yuba County and $3 million for the Calaveras County Water District.

"This money will help local government and taxpayers rebuild their communities after several years of devastating wildfires," Scott Summy, lead counsel at Baron & Budd, said in a statement. "The cities and counties will be in a better position to help their citizens rebuild and move forward."

The settlement is significant because it comes as Gov. Gavin Newsom (D) and state Legislature leaders negotiate legislation that could help PG&E and other utilities deal with future wildfire costs, said Michael Wara, a Stanford University professor and one of five members of California's Commission on Catastrophic Wildfire Cost and Recovery.

"The local governments are a very politically significant party in the legislative conversations happening over the next month," Wara said. If "settling with local governments creates greater comity in the negotiation around legislation, that ultimately is incredibly important to PG&E," he said.

"PG&E can go to the state and say, 'We're a good actor. We're trying to settle claims; we've settled these,'" he added.

The money municipalities will receive will pay for replacement of destroyed infrastructure such as water systems. With the fires in Santa Rosa and in Paradise, the ground got so hot, it cooked the pipes in the ground, Wara said. Those are not usable, and cities had to dig up and replace the equipment.

In Paradise, so many homes were destroyed, he said, that there are very few taxpayers left to provide income as the city rebuilds.

Twitter: @AnneCMulkern Email: amulkern@eenews.net

Return to Top

S&P Global
June 18, 2019

PG&E reaches $1B deal with Northern California communities hit by wildfires

By Garrett Hering Market Intelligence

Pacific Gas and Electric Co., or PG&E, has reached a $1 billion settlement with local governments of Northern California communities affected by a series of devastating wildfires in 2017 and 2018, as well as a 2015 fire in Butte County, the San Francisco-based utility said.

The deal calls for PG&E to pay the sum in cash as part of its Chapter 11 bankruptcy restructuring along with parent company, PG&E Corp., launched in January in response to wildfire-related liabilities that could exceed $30 billion. Judge Dennis Montali, the federal judge presiding over the case in the U.S. Bankruptcy Court for the Northern District of California, would need to approve the settlement as part of PG&E's forthcoming reorganization plan.

The settlement does not cover claims from individuals or businesses.

"We remain focused on supporting our customers and communities impacted by wildfires and helping them recover and rebuild," a PG&E spokesperson said in an emailed statement. "This is an important first step toward an orderly, fair and expeditious resolution of wildfire claims and a demonstration of our willingness to work collaboratively with stakeholders to achieve mutually acceptable resolutions. We hope to continue making progress with other stakeholders."

The Butte County town of Paradise, largely destroyed by the 2018 Camp Fire, would receive $270 million under the settlement. The California Department of Forestry and Fire Protection in May determined that PG&E power lines caused the Camp Fire, which resulted in 85 deaths, destroyed 18,804 structures and burned 153,336 acres.

The proposed settlement comes a month after Montali approved a $105 million wildfire fund for survivors most urgently in need of assistance, including those who lost homes and require temporary housing, and gave PG&E an additional four months to file a reorganization plan.

Executives and attorneys for the companies, however, have said they are unable to formulate a restructuring proposal without reforms to California law governing the assignment of liability for wildfires. Although a state-appointed panel recently recommended that lawmakers overhaul the state's wildfire liability structure, it remains uncertain whether the legislature will pass such reform.

To reduce the risk of igniting wildfires in its service territory, PG&E has begun a new policy of precautionary blackouts, recently approved as part of its 2019 wildfire safety plan.

"Our goal throughout the Chapter 11 process is to work collaboratively to fairly balance the interests of our many stakeholders, as well as the customers and communities we serve, as we work toward a timely resolution of our case," PG&E said, "while continuing to provide the safe and reliable natural gas and electric service that our customers expect and deserve."

Return to Top

S&P Global
June 18, 2019

Ore. House passes carbon cap-and-trade bill, sends it to Senate

By Jeff Stanfield Market Intelligence

Oregon could become the second state to impose an economywide mandatory greenhouse gas reduction law now that the House has passed a measure to set a cap on greenhouse gas emissions and create a market for trading carbon emissions allowances.

In a 36-24 vote largely along party lines, the state House on June 17 passed the measure, with only two Democrats joining all 22 Republicans to oppose it.

House Bill 2020 now goes to the Senate, where Democrats outnumber Republicans 18 to 12. Democratic Gov. Kate Brown applauded the House for passing the bill, calling it a historic opportunity to address climate change.

The measure would require the state to lower its greenhouse gas emissions cap each year to achieve reductions to at least 45% below 1990 emission levels by 2035 and at least 80% below those levels by 2050.

Oregon would auction allowances for regulated entities to meet their compliance obligations under the cap. Each year, the state would reduce the number of allowances auctioned, and scarcity-driven prices for remaining allowances accordingly would go up.

Polluters would be required to buy a tradable allowance for each ton of anthropogenic greenhouse gases they emit as measured by metric tons of carbon dioxide equivalent. Businesses could choose to continue purchasing allowances, reduce their emissions through technological innovation or both.

In addition to the state auctions, a secondary market for trading allowances would develop.

Revenue generated from the cap-and-trade program would be used to fund emissions reduction programs and help communities adapt to a low-carbon economy. At least 40% of program investments must benefit communities that are most impacted by climate change and at least 10% of the proceeds must benefit Native American tribes.

The measure was written in the House-Senate Joint Carbon Reduction Committee in a series of workshops

and hearings in April and May, and it passed the Joint Ways and Means Committee with amendments June 12.

As in the House, the Senate will consider the bill with no amendments because in Oregon, floor amendments are not allowed for bills that are the product of joint House-Senate committees.

Legislation for market-based approaches to reduce the effects of climate change have been proposed for more than a decade in the state, but opponents repeatedly have blocked legislative attempts to establish such efforts.

The bill would apply to electric utilities, namely Portland General Electric Co., Berkshire Hathaway Energy subsidiary PacifiCorp, and IDACORP Inc. subsidiary Idaho Power Co.; and natural gas companies including Avista Corp. subsidiary Avista Utilities Inc., MDU Resources Group Inc. subsidiary Cascade Natural Gas Corp., and Northwest Natural Holding Co. subsidiary Northwest Natural Gas Co.

The measure would also require compliance from electricity service suppliers, consumer-owned utilities, cooperatives and any other entity that markets electricity or manages load for wholesale and retail customers within a balancing authority that is at least partially located in Oregon. The measure also addresses natural gas suppliers where emissions are attributable to gas combustion.

Civil penalties of up to $25,000 per offense could be assessed against any person for intentional violations of the emissions limits, according to the bill.

The measure comes with a price tag for the state as well. The bill would provide nearly $23.7 million to fund eight agencies for the purposes of implementing the cap-and-trade program, according to a Ways and Means Committee report.

Return to Top

International/Misc.

S&P Global
June 18, 2019

Europe remained crucial outlet for US LNG in April

By Corey Paul Market Intelligence

Europe remained the top destination for U.S. LNG exports in April, with cargoes totaling about 47.6 Bcf heading to EU countries during the month.

The EU has served as a critical market for uncommitted LNG cargoes for months with a global oversupply depressing LNG prices in Asia. France, Spain and the Netherlands were among the top recipients of U.S. LNG export volumes in April, according to the latest figures the U.S. Department of Energy released June 14. That was also the case in March, which rounded out the first quarterly period ever in which Europe was the top destination for U.S. LNG since the first export from the U.S. mainland in February 2016.

But a key question remains: How long will Europe keep absorbing U.S. LNG exports as new LNG facilities come online and ramp up? The buildout in the U.S. could see the country's LNG export capacity rise above 7 Bcf/d by early 2020.

Asian gas demand, led by China, was strong enough in 2018 to absorb increasing LNG supplies from the U.S., Australia and Russia, BP PLC said in its "Statistical Review of World Energy 2019" released in June. But that demand weakened toward the end of the year, and Asian prices have since fallen "towards the bottom of the price band defined by U.S. exporters' full-cycle and operating costs," BP said.

"The prospect of further rapid increases in LNG supplies this year means there is a possibility of a first meaningful curtailment of some LNG supply capacity," BP said. "The extent of any eventual shut-in will depend importantly on the European market, which acts as the de facto 'market of last resort' for LNG supplies."

April U.S. LNG volumes to Europe and Central Asia amounted to about 40% of all exports of the American commodity during the month, according to DOE figures. The region includes Turkey, which was the destination of a single U.S. cargo carrying about 3 Bcf of LNG.

In April, five cargoes carried a total of about 17.1 Bcf of U.S. LNG to France, the greatest volume sent to any country. Four of the French cargoes came from Cheniere Energy Inc. plants: three from the company's Sabine Pass terminal in Louisiana and one from its new facility in Corpus Christi, Texas. The fifth cargo departed from Dominion Energy Inc.'s Cove Point LNG terminal in Maryland.

Another four ships carried about 13 Bcf to the Netherlands, while three cargoes departed with a total of about 10.2 Bcf for Spain.

The exports dovetailed with a continued push by the Trump administration for greater shipments of U.S. LNG to Europe, where regasification plants have been underused in recent years.

But significant volumes of U.S. LNG in April also flowed to countries in Latin America. For example, three cargoes headed for Mexico carrying a total of about 10.4 Bcf, and three other cargoes took about 9.4 Bcf total to Chile.

Only one cargo left the U.S. for China in April, continuing a trend of muted exports to the world's fastest-growing demand market during the ongoing trade war between Beijing and Washington. China recently raised tariffs on imports of U.S. LNG to 25% as part of its retaliation for the Trump administration hiking tariffs on Chinese goods.

But some other Asian countries continued to serve as key destinations for U.S. LNG. South Korea, the top overall destination for U.S. LNG since February 2016, took in four cargoes carrying a total of about 13 Bcf. About 10.4 Bcf of U.S. LNG headed for Japan in three shipments, and two cargoes carried about 6.8 Bcf total to India.

In May, Cheniere President and CEO Jack Fusco called the trade tensions "unproductive." But Fusco said exports to China are a small part of Cheniere's portfolio, and the company is insulated from tariffs. Cheniere executives also said the company expects the slump in LNG spot prices to spur a demand response in Europe and Asia.

Some analysts have warned that the trade war with China could threaten the growing U.S. LNG export industry, but Deputy Energy Secretary Dan Brouillette said at the G-20 energy meeting in Japan that the trade tension with China has not hurt demand for U.S. LNG or interest in investing in new export projects, according to S&P Global Platts.

"I suspect in the very near future we'll have an agreement that is fair to both countries," Brouillette said June 15. "We have not noticed any appreciable downtick or downturn in the sale of LNG. We've also not seen any impact on the production of LNG in the United States. It continues to rise."

Return to Top

S&P Global
June 18, 2019

Canada gives green light to Trans Mountain pipe expansion

By Gene Laverty Market Intelligence

Canada's federal government approved a 590,000-barrel-per-day expansion of the Trans Mountain Corp. pipeline network, paving the way for construction to restart on the stalled project this construction season, Prime Minister Justin Trudeau said.

The approval comes about nine months after a federal appeals court canceled permits for building the Trans Mountain Expansion. The new authorization to build comes after extensive negotiations with First Nations groups and reconsideration of the impact that tanker traffic has on marine life offshore British Columbia. The federal government, which owns Trans Mountain, will invest all of its income from the expansion in green energy projects, Trudeau said at an Ottawa press conference.

The expansion project was halted in August 2018 just as preliminary construction activity was getting underway. The government bought the 1950s-vintage Trans Mountain system from Kinder Morgan Inc. for C$4.5 billion after the Texas-based pipeline giant threatened to walk away from it because of regulatory uncertainty. The system connects the oil sands region in Alberta with a marine terminal in Burnaby, British Columbia, and includes a spur line that carries crude to refineries in Washington. The expansion would raise

capacity to 890,000 bbl/d from the current 300,000 bbl/d.

The start of construction in early 2018 sparked protests in British Columbia in which hundreds were arrested. The court invalidated construction permits issued by the government and the National Energy Board, the federal energy regulator. The National Energy Board granted new approvals after the ruling. The federal authorization should allow construction to restart barring a fresh court challenge.

Return to Top

FEDERAL ENERGY REGULATORY COMMISSION
WASHINGTON, D.C. 20426

SEP 23 2019

Re: FOIA No. FY19-95, Second and Final Response

VIA ELECTRONIC AND REGULAR MAIL

Ms. Maya K. van Rossum
Delaware Riverkeeper Network
925 Canal Street, Suite 3701
Bristol, PA 19007

Dear Ms. van Rossum:

This is a response to your correspondence accepted on June 17, 2019, in which you requested information pursuant to the Freedom of Information Act (FOIA), and the Federal Energy Regulatory Commission's (Commission or FERC) FOIA regulations, 18 C.F.R. § 388.108 (2019).[1] Specifically, you requested:

> Any and all records related to a Liquid Natural Gas (LNG) or Natural Gas Liquids (NGL) Facility whether one was proposed, received permits and/ or applied for permits along the Delaware River and/or in Paulsboro, NJ in the past five years; and
>
> Any records or documents submitted by or that mention the companies Fortress Energy, New Fortress, and/or Gibbstown Logistic Center and are located along the Delaware River and/or Paulsboro, NJ from the past five years

On August 23, 2019, you received an initial response releasing 15 responsive documents with redactions pursuant to FOIA Exemption 6.[2] Commission staff has completed review of the remaining identified 28 documents responsive to your request. Twenty-seven documents are internal emails that are protected from disclosure pursuant to FOIA Exemption 5, which protects "inter-agency or intra-agency memorandums or letters which would not be available by law to a party other than an agency in litigation with the agency." The e-mails contain internal staff deliberations and communications, and are

---

[1] 5 U.S.C. § 552, *as amended by* the FOIA Improvement Act of 2016, Pub. L. No. 114-185, 130 Stat. 538 (2016).

[2] 5 U.S.C. § 552(b)(6) (protecting files the disclosure of which would constitute a clearly unwarranted invasion of privacy).

precisely the type of information FOIA Exemption 5 was designed to protect. However, the Commission is electing to discretionarily release portions of nine of these emails with the names of lower level staff names redacted pursuant to FOIA Exemption 6. The remaining 18 emails will be withheld in full.

One remaining document is a slide presentation provided by Penn America East (PAE). On September 13, 2019, in response to a notice sent by the Commission pursuant to 18 C.F.R. § 388.112(d), PAE objected to the release of the identified document pursuant to FOIA Exemption 4.[3] Specifically, PAE argued that the presentation was provided voluntarily, contains commercially sensitive information, and is maintained as privileged and confidential by PAE. The presentation is protected in its entirety pursuant to FOIA Exemption 4, and will not be released.

The nine redacted documents are enclosed. As provided by the FOIA and 18 C.F.R. §388.110(a)(1) of the Commission's regulations, any appeal from this determination must be filed within 90 days of the date of this letter. The appeal must be in writing, addressed to James P. Danly, General Counsel, Federal Energy Regulatory Commission, 888 First Street, NE, Washington, D.C. 20426, and clearly marked "Freedom of Information Act Appeal." Please include a copy to Charles A. Beamon, Associate General Counsel, General and Administrative Law, at the same address.

You also have the right to seek dispute resolution services from the FOIA Public Liaison of the agency or the Office of Government Information Services (OGIS). Using OGIS services does not affect your right to pursue your appeal. You may contact OGIS bymail at Office of Government Information Services, National Archives and Records Administration, Room 2510, 8601 Adelphi Road, College Park, MD 20740-6001; email at ogis@nara.gov; telephone at (301) 837-1996; facsimile at (301) 837-0348; or toll-free at 1-(877) 684-6448.

Sincerely,

Leonard M. Tao

Leonard M. Tao
Director
Office of External Affairs

---

[3] *See* 5 U.S.C. § 552(b)(4) (protecting from disclosure trade secrets and commercial or financial information that's obtained from a person and privileged or confidential).

(b) (6) [redacted]

Subject: FW: USCG call (202-372-1420)
Location: call direct to USCG

Start: Tue 10/23/2018 3:30 PM
End: Tue 10/23/2018 4:00 PM
Show Time As: Tentative

Recurrence: (none)

Meeting Status: Not yet responded

Organizer: Andrew Kohout

Sure – come on by.

-----Original Appointment-----
From: Andrew Kohout
Sent: Thursday, October 18, 2018 11:31 AM
To: Andrew Kohout; Jacqueline Holmes; Jacqueline Holmes; Gordon Wagner; John Katz; Rich McGuire; Shannon Jones
Cc: (b) (6) [redacted]
Subject: FW: USCG call (202-372-1420)
When: Tuesday, October 23, 2018 3:30 PM-4:00 PM (UTC-05:00) Eastern Time (US & Canada).
Where: call direct to USCG

Alex was going to drop by my place to phone in, but if you're willing to participate we can both show up at you office.

-----Original Appointment-----
From: Andrew Kohout
Sent: Thursday, October 18, 2018 11:31 AM
To: Andrew Kohout; Jacqueline Holmes; Gordon Wagner; John Katz; Rich McGuire; Shannon Jones
Cc: (b) (6) [redacted]
Subject: USCG call (202-372-1420)
When: Tuesday, October 23, 2018 3:30 PM-4:00 PM (UTC-05:00) Eastern Time (US & Canada).
Where: call direct to USCG

Discussion with USCG on New Fortress liquefied natural gas facility in state waters with transfer to onshore to four truck loading facilities (with or without an onshore storage buffer tank). LNG carriers on weekly basis.

(b) (6) [redacted]

From: Gordon Wagner
Sent: Wednesday, August 30, 2017 7:30 AM
To: Jacqueline Holmes; (b) (6) [redacted]
Cc: (b) (6) [redacted]
Subject: RE: Voice Message from Unknown (912026396776)

Rich McGuire asked me if there had been any follow up on this, and all I could tell him was not from me. Anybody know if we are officially on for Sept. 7?

From: Jacqueline Holmes
Sent: Tuesday, August 22, 2017 2:47 PM
To: (b) (6) [redacted]; Andrew Kohout <Andrew.Kohout@ferc.gov>
Cc: Terry Turpin <Terry.Turpin@ferc.gov>; Gordon Wagner <Gordon.Wagner@ferc.gov>; (b) (6) [redacted]
(b) (6) [redacted]; John Wood <John.Wood@ferc.gov>
Subject: Re: Voice Message from Unknown (912026396776)

I am out of the office September 7 - 11 (Thursday - Monday) and you will be retired! Gordon can head the delegation if they need that day.

From: (b) (6) [redacted]
Sent: Tuesday, August 22, 2017 2:09 PM
To: Jacqueline Holmes; Andrew Kohout
Cc: Terry Turpin; Gordon Wagner; (b) (6) [redacted] John Wood
Subject: RE: Voice Message from Unknown (912026396776)

Anita Wilson just called again. Turns out next Thursday won't work for one of her people so she's now asking if they can plan on coming in *any time* on Thursday, September 7.

From: (b) (6) [redacted]
Sent: Tuesday, August 22, 2017 9:17 AM
To: Jacqueline Holmes <jacqueline.holmes@ferc.gov>; Andrew Kohout <andrew.kohout@ferc.gov>
Cc: Terry Turpin <terry.turpin@ferc.gov>; Gordon Wagner <gordon.wagner@ferc.gov>; (b) (6) [redacted]
(b) (6) [redacted]; John Wood <john.wood@ferc.gov>
Subject: RE: Voice Message from Unknown (912026396776)

(b) (5) [redacted]

So I called Anita back, and she is going to find out if 3 pm is OK for her folks.

From: Jacqueline Holmes
Sent: Tuesday, August 22, 2017 9:12 AM
To: (b) (6) [redacted] Andrew Kohout <Andrew.Kohout@ferc.gov>
Cc: Terry Turpin <Terry.Turpin@ferc.gov>; Gordon Wagner <Gordon.Wagner@ferc.gov>; (b) (6) [redacted]
(b) (6) [redacted]; John Wood <John.Wood@ferc.gov>
Subject: Re: Voice Message from Unknown (912026396776)

Cool I thanks

From: (b) (6) [redacted]
Sent: Tuesday, August 22, 2017 9:10 AM
To: Andrew Kohout; Jacqueline Holmes
Cc: Terry Turpin; Gordon Wagner; Cyrus Zarraby; John Wood
Subject: RE: Voice Message from Unknown (912026396776)

I just talked to Anita. She is checking with her PA people to see if 1 pm Thursday next week, August 31st, works for them.

From: Andrew Kohout
Sent: Tuesday, August 22, 2017 8:31 AM
To: Jacqueline Holmes <Jacqueline.Holmes@ferc.gov>; (b) (6) [redacted]
Cc: Terry Turpin <Terry.Turpin@ferc.gov>; Gordon Wagner <Gordon.Wagner@ferc.gov>; (b) (6) [redacted]
(b) (6) [redacted]; John Wood <John.Wood@ferc.gov>
Subject: RE: Voice Message from Unknown (912026396776)

(b) (5) [redacted]

Andrew Kohout, P.E.
Chief, LNG Branch 1
Office of Energy Projects
Federal Energy Regulatory Commission
202.502.8053

All information contained in this email message is intended for use only by the staff of the Federal Energy Regulatory Commission and the intended recipient(s), and may contain information that is non-public and part of the agency deliberative process. If you are not an intended recipient, you are hereby notified that any use or dissemination of this communication is strictly prohibited. If you have received this communication in error, please delete all copies of the message and its attachments and notify the sender immediately. Your receipt of this message is not intended to waive any applicable privilege.

From: Jacqueline Holmes
Sent: Monday, August 21, 2017 9:14 PM
To: Jack Kendall (b) (6) [redacted]
Cc: Terry Turpin <Terry.Turpin@ferc.gov>; Gordon Wagner <Gordon.Wagner@ferc.gov>; (b) (6) [redacted]
(b) (6) [redacted]; Andrew Kohout <Andrew.Kohout@ferc.gov>; John Wood <John.Wood@ferc.gov>
Subject: Re: Voice Message from Unknown (912026396776)

Slight correction -- I am booked from 2-3 next Thursday.

From: Jacqueline Holmes
Sent: Monday, August 21, 2017 9:04 PM
To: (b) (6) [redacted]
Cc: Terry Turpin; Gordon Wagner; (b) (6) [redacted] Andrew Kohout; John Wood
Subject: Fw: Voice Message from Unknown (912026396776)

(b) (6), could you give Anita Wilson a call (I would have asked Gordon, but I presume he is out). She wants to talk LNG jurisdiction. I think I am basically free next Thursday, but I don't know about OEP. Terry, who do you want us to include?

From: Unity Messaging System - WDCUNITYPS02 <Unity.Messaging2@ferc.gov>
Sent: Monday, August 21, 2017 6:09 PM
To: Jacqueline Holmes
Subject: Voice Message from Unknown (912026396776)

(b) (6) [redacted]

From: (b) (6) [redacted]
Sent: Wednesday, August 30, 2017 8:49 AM
To: Gordon Wagner; Jacqueline Holmes; (b) (6) [redacted]; Rich McGuire
Subject: FW: Request for meeting on jurisdictional issues

I talked to Anita Wilson and told her that we couldn't yet say which staff members would be at the meeting but she could go ahead and contact (b) (6) [redacted] to set up a meeting for Thursday, September 7.

I don't see anything on the Outlook calendar.

But Anita hasn't called me back.

From: (b) (6) [redacted]
Sent: Wednesday, August 23, 2017 10:32 AM
To: 'Wilson, Anita' <awilson@velaw.com>
Cc: (b) (6) [redacted]
Subject: RE: Request for meeting on jurisdictional issues

Anita,

Please contact (b) (6) [redacted] at 202-502-(b) (6) so she can check the schedule and conference room availability on Thursday, September 7.

Jack

From: Wilson, Anita [mailto:awilson@velaw.com]
Sent: Wednesday, August 23, 2017 10:07 AM
To: (b) (6) [redacted] Jacqueline Holmes <Jacqueline.Holmes@ferc.gov>
Cc: Decker, John <jdecker@velaw.com>
Subject: Request for meeting on jurisdictional issues

Jack, per my voicemail yesterday, after discussion and checking on changes in travel schedules with the client, Fortress would like to schedule their meeting with you on jurisdictional issues on Thursday, September 7. Please could you let us know what times might be available on that day.

Thank you for your help in coordinating this meeting,
Anita

Anita Rutkowski Wilson
Partner

E awilson@velaw.com
W+1.202.639.6776

Vinson & Elkins LLP
2200 Pennsylvania Avenue NW
Suite 500 West
Washington, DC 20037-1701

bio | vcard | velaw.com

CONFIDENTIALITY NOTICE: The information in this email may be confidential and/or privileged. This email is intended to be reviewed by only the individual or organization named above. If you are not the intended recipient or an authorized representative of the intended recipient, you are hereby notified that any review, dissemination or copying of this email and its attachments, if any, or the information contained herein is prohibited. If you have received this email in error, please immediately notify the sender by return email and delete this email from your system.

Thank You.

(b) (6) [redacted]

From: Gordon Wagner
Sent: Wednesday, May 16, 2018 8:06 AM
To: (b) (6) [redacted]
Subject: FW: LNG transloading proposal in New Jersey
Attachments: 2017-09-07 Repauno Summary of FERC Staff Meeting.pdf

(b) (5) [redacted]

From: Richard Foley
Sent: Wednesday, May 16, 2018 7:32 AM
To: Gordon Wagner <Gordon.Wagner@ferc.gov>
Subject: FW: LNG transloading proposal in New Jersey

this is the project – our staff opinion was that this was not " an LNG terminal " - same as you remember it ???

From: Brunatti, Megan [mailto:Megan.Brunatti@dep.nj.gov]
Sent: Tuesday, May 15, 2018 5:24 PM
To: Richard Foley <Richard.Foley@ferc.gov>
Cc: Foster, Ruth <Ruth.Foster@dep.nj.gov>
Subject: FW: LNG transloading proposal in New Jersey

Rich,

Since my original email was returned due to the size, I have separated the attachments. Here is the second one.

Thanks again for your help.

Megan Brunatti, Supervisor
Office of Permit Coordination & Environmental Review
New Jersey Department of Environmental Protection
(609)984-2462
megan.brunatti@dep.nj.gov

From: Brunatti, Megan
Sent: Tuesday, May 15, 2018 5:12 PM
To: 'richard.foley@ferc.gov' <richard.foley@ferc.gov>
Cc: Foster, Ruth <Ruth.Foster@dep.nj.gov>
Subject: LNG transloading proposal in New Jersey

Rich,

Thank you very much for speaking with me today regarding an LNG transloading proposal in New Jersey. As discussed, our review of this project to date is limited to the attached Letter of Intent to the Coast Guard for a Water Suitability Assessment.

The NJDEP is interested in whether or not FERC would have oversight over this type of operation.

I forgot that we have a memo provided by Fortress Investors which discusses a meeting with FERC staff and an informal opinion (attached). The NJDEP would appreciate confirmation from FERC, since this memo was prepared by counsel for the applicant.

I am glad that we were able to open the lines of communication regarding this proposal in NJ, and I look forward to speaking to you again in the future.

Thanks again for your time.

Megan Brunatti, Supervisor
Office of Permit Coordination & Environmental Review
New Jersey Department of Environmental Protection
(609)984-2462
megan.brunatti@dep.nj.gov

(b) (6) [redacted]

Subject: FW: USCG call (202-372-1420)
Location: call direct to USCG

Start: Tue 10/23/2018 3:30 PM
End: Tue 10/23/2018 4:00 PM
Show Time As: Tentative

Recurrence: (none)

Meeting Status: Not yet responded

Organizer: Andrew Kohout

Sure – come on by.

-----Original Appointment-----
From: Andrew Kohout
Sent: Thursday, October 18, 2018 11:31 AM
To: Andrew Kohout; Jacqueline Holmes; Jacqueline Holmes; Gordon Wagner; John Katz; Rich McGuire; Shannon Jones
Cc: (b) (6) [redacted]
Subject: FW: USCG call (202-372-1420)
When: Tuesday, October 23, 2018 3:30 PM-4:00 PM (UTC-05:00) Eastern Time (US & Canada).
Where: call direct to USCG

(b) (6) was going to drop by my place to phone in, but if you're willing to participate we can both show up at you office.

-----Original Appointment-----
From: Andrew Kohout
Sent: Thursday, October 18, 2018 11:31 AM
To: Andrew Kohout; Jacqueline Holmes; Gordon Wagner; John Katz; Rich McGuire; Shannon Jones
Cc: (b) (6) [redacted]
Subject: USCG call (202-372-1420)
When: Tuesday, October 23, 2018 3:30 PM-4:00 PM (UTC-05:00) Eastern Time (US & Canada).
Where: call direct to USCG

Discussion with USCG on New Fortress liquefied natural gas facility in state waters with transfer to onshore to four truck loading facilities (with or without an onshore storage buffer tank). LNG carriers on weekly basis.

(b) (6) [redacted]

From: Terry Turpin
Sent: Thursday, August 31, 2017 6:09 PM
To: Jacqueline Holmes; Heather Campbell; Rich McGuire; John Wood
Subject: RE: Meeting: Fortress

I'll be submerged in a senate hearing at that time, so much as I'd rather be here, please proceed w/o me.

From: Jacqueline Holmes
Sent: Thursday, August 31, 2017 11:12 AM
To: (b) (6) [redacted] Andrew Kohout <Andrew.Kohout@ferc.gov>; Brian S. White <Brian.White@ferc.gov>; (b) (6) [redacted] Danny Laffoon <Danny.Laffoon@ferc.gov>; (b) (6) [redacted]; David Swearingen <David.Swearingen@ferc.gov>; (b) (6) [redacted] Gordon Wagner <Gordon.Wagner@ferc.gov>; Heather Campbell <heather.e.campbell@ferc.gov>; (b) (6) [redacted] James Martin <James.Martin@ferc.gov>; (b) (6) [redacted]; (b) (6) [redacted] (b) (6) [redacted] (b) (6) [redacted] Laura Kane <Laura.Kane@ferc.gov>; (b) (6) [redacted] Nils Nichols <Nils.Nichols@ferc.gov>; (b) (6) [redacted]; PJ-10 <PJ-10@ferc.gov>; PJ-10 1 <PJ-101@ferc.gov>; PJ-10 2 <PJ-102@ferc.gov>; Rich McGuire <Rich.McGuire@ferc.gov>; (b) (6) [redacted] (b) (6) [redacted] (b) (6) [redacted]; Shannon Jones <Shannon.Jones@ferc.gov>; Terry Turpin <Terry.Turpin@ferc.gov>; (b) (6) [redacted] jdecker@velaw.com
Cc: (b) (6) [redacted]
Subject: RE: Meeting: Fortress
Importance: High

Sorry – my bad. As much as I know many of you may really be looking forward to this (and don't let me dissuade you if you really want to go), I think we can do with a smaller group: Terry, John Wood, Heather, Gordon, (b) (6), (Joel, Sandy, (b) (6) [redacted], and/or (b) (6) [redacted] if they are interested), Rich McGuire, P.J., Rich Foley, Marsha, and Andrew (and any they want to include). Thanks!

-----Original Appointment-----
From: (b) (6) [redacted]
Sent: Thursday, August 31, 2017 10:45 AM
To: (b) (6) [redacted]; Andrew Kohout; Brian S. White; (b) (6) [redacted] Danny Laffoon; (b) (6) [redacted]; David Swearingen; (b) (6) [redacted]; Gordon Wagner; Heather Campbell; (b) (6) [redacted]; Jacqueline Holmes; James Martin; (b) (6) [redacted]; (b) (6) [redacted]; Laura Kane; (b) (6) [redacted]; Nils Nichols; (b) (6) [redacted]; PJ-10; PJ-10 1; PJ-10 2; Rich McGuire; (b) (6) [redacted]; Shannon Jones; Terry Turpin; (b) (6) [redacted]; brogers@fortress.com; jdecker@velaw.com; cterhune@velaw.com; Wilson, Anita (awilson@velaw.com)
Subject: Meeting: Fortress
When: Thursday, September 07, 2017 10:00 AM-10:50 AM (UTC-05:00) Eastern Time (US & Canada).
Where: 61-06 CR

Please mark your calendar and confirm your attendance to meet with representatives from Fortress to discuss whether FERC would assert jurisdiction over a project that will consist of

the following elements: installation of facilities to liquefy natural gas at the wellhead, transportation of LNG by rail or by truck to a private port facility being developed by another subsidiary of Fortress at the DuPont Rapauno site in Greenwich Township, New Jersey, loading the LNG onto tankers for export.

Attendees:

Britt Rogers
John Decker
Christopher Terhune
Anita Wilson

(b) (6) [redacted]

From: Jacqueline Holmes
Sent: Wednesday, August 30, 2017 9:10 AM
To: (b) (6) [redacted]
Subject: FW: Request for meeting on jurisdictional issues

(b) (6) – has this meeting been set up? I won't be able to attend, but include Gordon and (b) (6) [redacted] for OGC. Thanks.

From: (b) (6) [redacted]
Sent: Wednesday, August 30, 2017 8:49 AM
To: Gordon Wagner <Gordon.Wagner@ferc.gov>; Jacqueline Holmes <Jacqueline.Holmes@ferc.gov>; (b) (6) [redacted] <(b) (6) [redacted]>; Rich McGuire <Rich.McGuire@ferc.gov>
Subject: FW: Request for meeting on jurisdictional issues

I talked to Anita Wilson and told her that we couldn't yet say which staff members would be at the meeting but she could go ahead and contact (b) (6) [redacted] to set up a meeting for Thursday, September 7.

I don't see anything on the Outlook calendar.

But Anita hasn't called me back.

From: (b) (6) [redacted]
Sent: Wednesday, August 23, 2017 10:32 AM
To: 'Wilson, Anita' <awilson@velaw.com>
Cc: (b) (6) [redacted]
Subject: RE: Request for meeting on jurisdictional issues

Anita,

Please contact (b) (6) [redacted] at 202-502-(b) (6) so she can check the schedule and conference room availability on Thursday, September 7.

(b) (6)

From: Wilson, Anita [mailto:awilson@velaw.com]
Sent: Wednesday, August 23, 2017 10:07 AM
To: (b) (6) [redacted] Jacqueline Holmes <Jacqueline.Holmes@ferc.gov>
Cc: Decker, John <jdecker@velaw.com>
Subject: Request for meeting on jurisdictional issues

(b) (6), per my voicemail yesterday, after discussion and checking on changes in travel schedules with the client, Fortress would like to schedule their meeting with you on jurisdictional issues on Thursday, September 7. Please could you let us know what times might be available on that day.

Thank you for your help in coordinating this meeting,
Anita

Anita Rutkowski Wilson
Partner

E awilson@velaw.com Vinson & Elkins LLP
W+1.202 639 6776 2200 Pennsylvania Avenue NW
Suite 500 West
Washington, DC 20037-1701

bio | vcard | velaw.com

Thank You.

(b) (6) [redacted]

From: (b) (6) [redacted]
Sent: Wednesday, August 30, 2017 8:49 AM
To: Gordon Wagner; Jacqueline Holmes; (b) (6) [redacted] Rich McGuire
Subject: FW: Request for meeting on jurisdictional issues

I talked to Anita Wilson and told her that we couldn't yet say which staff members would be at the meeting but she could go ahead and contact (b) (6) [redacted] to set up a meeting for Thursday, September 7.

I don't see anything on the Outlook calendar.

But Anita hasn't called me back.

From: (b) (6) [redacted]
Sent: Wednesday, August 23, 2017 10:32 AM
To: 'Wilson, Anita' <awilson@velaw.com>
Cc: (b) (6) [redacted]
Subject: RE: Request for meeting on jurisdictional issues

Anita,

Please contact (b) (6) [redacted] at 202-502-(b) (6) [redacted] so she can check the schedule and conference room availability on Thursday, September 7.

Jack

From: Wilson, Anita [mailto:awilson@velaw.com]
Sent: Wednesday, August 23, 2017 10:07 AM
To: (b) (6) [redacted] Jacqueline Holmes <Jacqueline.Holmes@ferc.gov>
Cc: Decker, John <jdecker@velaw.com>
Subject: Request for meeting on jurisdictional issues

(b) (6) [redacted] per my voicemail yesterday, after discussion and checking on changes in travel schedules with the client, Fortress would like to schedule their meeting with you on jurisdictional issues on Thursday, September 7. Please could you let us know what times might be available on that day.

Thank you for your help in coordinating this meeting,
Anita

Anita Rutkowski Wilson
Partner
E awilson@velaw.com Vinson & Elkins LLP
W+1.202.639.6776 2200 Pennsylvania Avenue NW
Suite 500 West
Washington, DC 20037-1701

(b) (6) [redacted]

From: (b) (6) [redacted]
Sent: Wednesday, August 30, 2017 9:14 AM
To: Jacqueline Holmes
Subject: RE: Request for meeting on jurisdictional issues

(b) (6) [redacted]

Gave me heads up about these last week... I haven't heard from Anita Wilson yet. Do you want me to give her a call this morning?

From: Jacqueline Holmes
Sent: Wednesday, August 30, 2017 9:10 AM
To: (b) (6) [redacted]
Subject: FW: Request for meeting on jurisdictional issues

(b) (6) – has this meeting been set up? I won't be able to attend, but include Gordon and (b) (6) [redacted]) for OGC. Thanks.

From: (b) (6) [redacted]
Sent: Wednesday, August 30, 2017 8:49 AM
To: Gordon Wagner <Gordon.Wagner@ferc.gov>; Jacqueline Holmes <Jacqueline.Holmes@ferc.gov>; (b) (6) [redacted] Rich McGuire <Rich.McGuire@ferc.gov>
Subject: FW: Request for meeting on jurisdictional issues

I talked to Anita Wilson and told her that we couldn't yet say which staff members would be at the meeting but she could go ahead and contact (b) (6) [redacted] to set up a meeting for Thursday, September 7.

I don't see anything on the Outlook calendar.

But Anita hasn't called me back.

From: (b) (6) [redacted]
Sent: Wednesday, August 23, 2017 10:32 AM
To: 'Wilson, Anita' <awilson@velaw.com>
Cc: (b) (6) [redacted]
Subject: RE: Request for meeting on jurisdictional issues

Anita,

Please contact (b) (6) [redacted] at 202-502-(b) (6) so she can check the schedule and conference room availability on Thursday, September 7.

Jack

From: Wilson, Anita [mailto:awilson@velaw.com]
Sent: Wednesday, August 23, 2017 10:07 AM
To: (b) (6) [redacted] Jacqueline Holmes <Jacqueline.Holmes@ferc.gov>

Cc: Decker, John <jdecker@velaw.com>
Subject: Request for meeting on jurisdictional issues

Jack, per my voicemail yesterday, after discussion and checking on changes in travel schedules with the client, Fortress would like to schedule their meeting with you on jurisdictional issues on Thursday, September 7. Please could you let us know what times might be available on that day.

Thank you for your help in coordinating this meeting,
Anita

Anita Rutkowski Wilson
Partner

E awilson@velaw.com Vinson & Elkins LLP
W+1 202 639 6776 2200 Pennsylvania Avenue NW
Suite 500 West
Washington, DC 20037-1701

bio | vcard | velaw.com
